HIKMICRO

Thermal Image Scope

User Manual

Legal Information

©2021 Hangzhou Microimage Software Co., Ltd. All rights reserved.

About this Manual

The Manual includes instructions for using and managing the Product. Pictures, charts, images and all other information hereinafter are for description and explanation only. The information contained in the Manual is subject to change, without notice, due to firmware updates or other reasons. Please find the latest version of this Manual at the HIKMICRO website (***http://www.hikmicrotech.com***).
Please use this Manual with the guidance and assistance of professionals trained in supporting the Product.

Trademarks

HIKMICRO and other HIKMICRO's trademarks and logos are the properties of HIKMICRO in various jurisdictions.
Other trademarks and logos mentioned are the properties of their respective owners.

Disclaimer

TO THE MAXIMUM EXTENT PERMITTED BY APPLICABLE LAW, THIS MANUAL AND THE PRODUCT DESCRIBED, WITH ITS HARDWARE, SOFTWARE AND FIRMWARE, ARE PROVIDED "AS IS" AND "WITH ALL FAULTS AND ERRORS". HIKMICRO MAKES NO WARRANTIES, EXPRESS OR IMPLIED, INCLUDING WITHOUT LIMITATION, MERCHANTABILITY, SATISFACTORY QUALITY, OR FITNESS FOR A PARTICULAR PURPOSE. THE USE OF THE PRODUCT BY YOU IS AT YOUR OWN RISK. IN NO EVENT WILL HIKMICRO BE LIABLE TO YOU FOR ANY SPECIAL, CONSEQUENTIAL, INCIDENTAL, OR INDIRECT DAMAGES, INCLUDING, AMONG OTHERS, DAMAGES FOR LOSS OF BUSINESS PROFITS, BUSINESS INTERRUPTION, OR LOSS OF DATA, CORRUPTION OF SYSTEMS, OR LOSS OF DOCUMENTATION, WHETHER BASED ON BREACH OF CONTRACT, TORT (INCLUDING NEGLIGENCE), PRODUCT LIABILITY, OR OTHERWISE, IN CONNECTION WITH THE USE OF THE PRODUCT, EVEN IF HIKMICRO HAS BEEN ADVISED OF THE POSSIBILITY OF SUCH DAMAGES OR LOSS.
YOU ACKNOWLEDGE THAT THE NATURE OF THE INTERNET PROVIDES FOR INHERENT SECURITY RISKS, AND HIKMICRO SHALL NOT TAKE ANY RESPONSIBILITIES FOR ABNORMAL OPERATION, PRIVACY LEAKAGE OR OTHER DAMAGES RESULTING FROM CYBER-ATTACK, HACKER ATTACK, VIRUS INFECTION, OR OTHER INTERNET SECURITY RISKS; HOWEVER, HIKMICRO WILL PROVIDE TIMELY TECHNICAL SUPPORT IF REQUIRED.
YOU AGREE TO USE THIS PRODUCT IN COMPLIANCE WITH ALL APPLICABLE LAWS, AND YOU ARE SOLELY RESPONSIBLE FOR ENSURING THAT YOUR USE CONFORMS TO THE APPLICABLE LAW. ESPECIALLY, YOU ARE RESPONSIBLE, FOR USING THIS PRODUCT IN A MANNER THAT DOES NOT INFRINGE ON THE RIGHTS OF THIRD PARTIES, INCLUDING WITHOUT LIMITATION, RIGHTS OF PUBLICITY, INTELLECTUAL PROPERTY RIGHTS, OR DATA PROTECTION AND OTHER PRIVACY RIGHTS. YOU SHALL NOT USE THIS PRODUCT FOR ILLEGAL HUNTING ANIMALS, INVASION OF PRIVACY OR ANY OTHER PURPOSE WHICH IS ILLEGAL OR DETRIMENTAL TO THE PUBLIC INTEREST. YOU SHALL

NOT USE THIS PRODUCT FOR ANY PROHIBITED END-USES, INCLUDING THE DEVELOPMENT OR PRODUCTION OF WEAPONS OF MASS DESTRUCTION, THE DEVELOPMENT OR PRODUCTION OF CHEMICAL OR BIOLOGICAL WEAPONS, ANY ACTIVITIES IN THE CONTEXT RELATED TO ANY NUCLEAR EXPLOSIVE OR UNSAFE NUCLEAR FUEL-CYCLE, OR IN SUPPORT OF HUMAN RIGHTS ABUSES.

IN THE EVENT OF ANY CONFLICTS BETWEEN THIS MANUAL AND THE APPLICABLE LAW, THE LATER PREVAILS.

Regulatory Information

FCC Information

Please take attention that changes or modification not expressly approved by the party responsible for compliance could void the user's authority to operate the equipment.
FCC compliance: This equipment has been tested and found to comply with the limits for a Class B digital device, pursuant to part 15 of the FCC Rules. These limits are designed to provide reasonable protection against harmful interference in a residential installation. This equipment generates, uses and can radiate radio frequency energy and, if not installed and used in accordance with the instructions, may cause harmful interference to radio communications. However, there is no guarantee that interference will not occur in a particular installation. If this equipment does cause harmful interference to radio or television reception, which can be determined by turning the equipment off and on, the user is encouraged to try to correct the interference by one or more of the following measures:
—Reorient or relocate the receiving antenna.
—Increase the separation between the equipment and receiver.
—Connect the equipment into an outlet on a circuit different from that to which the receiver is connected.
—Consult the dealer or an experienced radio/TV technician for help
This equipment should be installed and operated with a minimum distance 20 cm between the radiator and your body.
FCC Conditions
This device complies with part 15 of the FCC Rules. Operation is subject to the following two conditions:
1. This device may not cause harmful interference.
2. This device must accept any interference received, including interference that may cause undesired operation.

EU Conformity Statement

This product and - if applicable - the supplied accessories too are marked with "CE" and comply therefore with the applicable harmonized European standards listed under the EMC Directive 2014/30/EU, the RoHS Directive 2011/65/EU

2012/19/EU (WEEE directive): Products marked with this symbol cannot be disposed of as unsorted municipal waste in the European Union. For proper recycling, return this product to your local supplier upon the purchase of equivalent new equipment, or dispose of it at designated collection points. For more information see: www.recyclethis.info

2006/66/EC (battery directive): This product contains a battery that cannot be disposed of as unsorted municipal waste in the European Union. See the product documentation for specific battery information. The battery is marked with this symbol, which may include lettering to indicate cadmium (Cd), lead (Pb), or mercury (Hg). For proper recycling, return the battery to your supplier or to a designated collection point. For more information see: www.recyclethis.info

Industry Canada ICES-003 Compliance

This device meets the CAN ICES-3 (B)/NMB-3(B) standards requirements.

1. This device complies with Industry Canada licence-exempt RSS standard(s). Operation is subject to the following two conditions: this device may not cause interference, and
2. this device must accept any interference, including interference that may cause undesired operation of the device.

1. Le présent appareil est conforme aux CNR d'Industrie Canada applicables aux appareils radioexempts de licence. L'exploitation est autorisée aux deux conditions suivantes : l'appareil ne doit pas produire de brouillage, et
2. l'utilisateur de l'appareil doit accepter tout brouillage radioélectrique subi, même si le brouillage est susceptible d'en compromettre le fonctionnement.

Under Industry Canada regulations, this radio transmitter may only operate using an antenna of a type and maximum (or lesser) gain approved for the transmitter by Industry Canada. To reduce potential radio interference to other users, the antenna type and its gain should be so chosen that the equivalent isotropically radiated power (e.i.r.p.) is not more than that necessary for successful communication.

Conformément à la réglementation d'Industrie Canada, le présent émetteur radio peut fonctionner avec une antenne d'un type et d'un gain maximal (ou inférieur) approuvé pour l'émetteur par Industrie Canada. Dans le but de réduire les risques de brouillage radioélectrique à l'intention des autres utilisateurs, il faut choisir le type d'antenne et son gain de sorte que la puissance isotrope rayonnée équivalente (p.i.r.e.) ne dépasse pas l'intensité nécessaire à l'établissement d'une communication satisfaisante.

This equipment should be installed and operated with a minimum distance 20cm between the radiator and your body.

Cet équipement doit être installé et utilisé à une distance minimale de 20 cm entre le radiateur et votre corps.

Symbol Conventions

The symbols that may be found in this document are defined as follows.

Symbol	Description
Danger	Indicates a hazardous situation which, if not avoided, will or could result in death or serious injury.
Caution	Indicates a potentially hazardous situation which, if not avoided, could result in equipment damage, data loss, performance degradation, or unexpected results.
Note	Provides additional information to emphasize or supplement important points of the main text.

Safety Instruction

These instructions are intended to ensure that user can use the product correctly to avoid danger or property loss.

Laws and Regulations

- Use of the product must be in strict compliance with the local electrical safety regulations.

Transportation

- Keep the device in original or similar packaging while transporting it.
- Keep all wrappers after unpacking them for future use. In case of any failure occurred, you need to return the device to the factory with the original wrapper. Transportation without the original wrapper may result in damage on the device and the company shall not take any responsibilities.
- DO NOT drop the product or subject it to physical shock. Keep the device away from magnetic interference.

Power Supply

- Please purchase the charger by yourself. Input voltage should meet the Limited Power Source (5 VDC, 2A) according to the IEC61010-1 standard. Please refer to technical specifications for detailed information.
- Make sure the plug is properly connected to the power socket.
- DO NOT connect multiple devices to one power adapter, to avoid over-heating or fire hazards caused by overload.
- The battery charger is included in the package. The input voltage for the supplied battery charger should meet the Limited Power Source (5 VDC, 2 A).
- The power source should meet limited power source or PS2 requirements according to IEC 60950-1 OR ICE 62368-1 standard.

Battery

- Improper use or replacement of the battery may result in explosion hazard. Replace with the same or equivalent type only. The battery type is 18650 with the protection board, and the battery size should be 19 mm × 70 mm. The rated voltage and capacity are 3.6 VDC/3.35 Ah (12.06 Wh). Dispose of used batteries in conformance with the instructions provided by the battery manufacturer.
- Make sure the battery temperature is between 0°C to 45°C (32°F to 113°F) when charging.
- For long-term storage of the battery, make sure it is fully charged every half year to ensure the battery quality. Otherwise, damage may occur.
- Do not charge other battery types with the supplied charger. Confirm there is no flammable material within 2 m of the charger during charging.
- DO NOT place the battery near heating or fire source. Avoid direct sunlight.
- DO NOT swallow the battery to avoid chemical burns.
- DO NOT place the battery in the reach of children.

- The battery can not be charged with external power source directly.
- The device can not be charged, please use the supplied charger to charge the battery.
- Please purchase the adapter by yourself. The using environment of the adapter should be consistent with that of the device.

Maintenance

- If the product does not work properly, please contact your dealer or the nearest service center. We shall not assume any responsibility for problems caused by unauthorized repair or maintenance.
- Wipe the device gently with a clean cloth and a small quantity of ethanol, if necessary.
- If the equipment is used in a manner not specified by the manufacturer, the protection provided by the device may be impaired.
- Clean the lens with soft and dry cloth or wiping paper to avoid scratching it.

Using Environment

- Make sure the running environment meets the requirement of the device. The operating temperature shall be -30°C to 55°C (-22°F to 131°F), and the operating humidity shall be 95% or less.
- DO NOT expose the device to extremely hot, cold, dusty, corrosive, saline-alkali, or damp environments.
- This device can only be safely used in the region below 2000 meters above the sea level.
- Avoid equipment installation on vibratory surface or places subject to shock (neglect may cause equipment damage).
- DO NOT aim the lens at the sun or any other bright light.

Emergency

- If smoke, odor, or noise arises from the device, immediately turn off the power, unplug the power cable, and contact the service center.

Laser

When any laser equipment is in use, make sure that the device lens is not exposed to the laser beam, or it may burn out. The laser radiation emitted from the device can cause eye injuries, burning of skin or inflammable substances. Before enabling the light supplement function, make sure no human or inflammable substances are in front of the laser lens. Do not place the device where minors can fetch it.

Manufacture Address

Room 313, Unit B, Building 2, 399 Danfeng Road, Xixing Subdistrict, Binjiang District, Hangzhou, Zhejiang 310052, China
Hangzhou Microimage Software Co., Ltd.

COMPLIANCE NOTICE: The thermal series products might be subject to export controls in various countries or regions, including without limitation, the United States, European Union, United

Kingdom and/or other member countries of the Wassenaar Arrangement. Please consult your professional legal or compliance expert or local government authorities for any necessary export license requirements if you intend to transfer, export, re-export the thermal series products among different countries.

Table of Contents

Chapter 1 Overview **1**
1.1 Device Description 1
1.2 Main Function 1
1.3 Appearance 1
Chapter 2 Preparation **5**
2.1 Cable Connection 5
2.2 Install Battery 5
2.3 Power On/Off 6
2.4 Menu Description 7
Chapter 3 Image Settings **8**
3.1 Adjust Diopter 8
3.2 Adjust Focus 8
3.3 Adjust Brightness 9
3.4 Adjust Contrast 9
3.5 Select Scene Mode 9
3.6 Set Palettes 9
3.7 Adjust Digital Zoom 11
3.8 Correct Defective Pixel 11
3.9 Flat Field Correction 12
3.10 Set Picture in Picture Mode 12
3.11 Set OSD 13
3.11.1 Synchronize Time 13
Chapter 4 Burning Prevention **15**
Chapter 5 Hot Tracking **16**
Chapter 6 Aiming Point Settings **17**
6.1 Correct Reticle 17
6.2 Correct Trajectory 18
6.3 Set Reticle Color 19

Chapter 7 Measure Distance **21**
Chapter 8 Picture and Video **22**
8.1 Capture Picture 22
8.2 Record Video 22
8.3 Export Files 23
Chapter 9 Client Software Connection **24**
Chapter 10 CVBS Output **25**
10.1 Cable Connection 25
Chapter 11 Language Settings **26**
Chapter 12 Maintenance **27**
12.1 View Device Information 27
12.2 Upgrade Device 27
12.3 Restore Device 27
Chapter 13 Frequently Asked Questions **28**
13.1 Why is the monitor off? 28
13.2 The image is not clear, how to adjust it? 28
13.3 Capturing or recording fails. What's the problem? 28
13.4 Why the PC cannot identify the device? 28
Chapter 14 Appendix **29**
14.1 Device Command 29
14.2 Device Communication Matrix 29

Chapter 1 Overview

1.1 Device Description

The thermal image scope is equipped with high-sensitivity IR detector, and adopts advanced thermal imaging technology, to get clear view in poor visibility or dark environment.
It helps to view the target and measure the distance. It can view the moving target and meet the outdoor condition. The device can be widely used in patrolling, searching and rescuing, hiking, hunting, and travel, etc.

1.2 Main Function

- Distance Measurement: The device can detect the distance between the target and the device.
- Highest Temperature Tracking: The device can detect the highest temperature in the scene and mark the spot.
- Client Software Connection: The device can capture snapshots, record videos, and set parameters by T-Vision App after being connected to your phone via hotspot.
- Image Correction: The device supports DPC (Defective Pixel Correction) and FFC (Flat Field Correction) which can optimize the image quality.
- Reticle Correction: The reticle helps you to aim at the target fast and accurately.
- Trajectory Correction: The cursor helps you to shot the target with high accuracy.
- Palette: The device supports multiple palettes, and you can set the palette mode according to the scene.
- Fusion: The device can display the fusion of thermal view and optical view.

Note

The distance measurement function is only supported by certain models.

1.3 Appearance

There are two types of handheld thermal monocular cameras. The appearance description of the two types are shown below. Please take the actual product for reference.

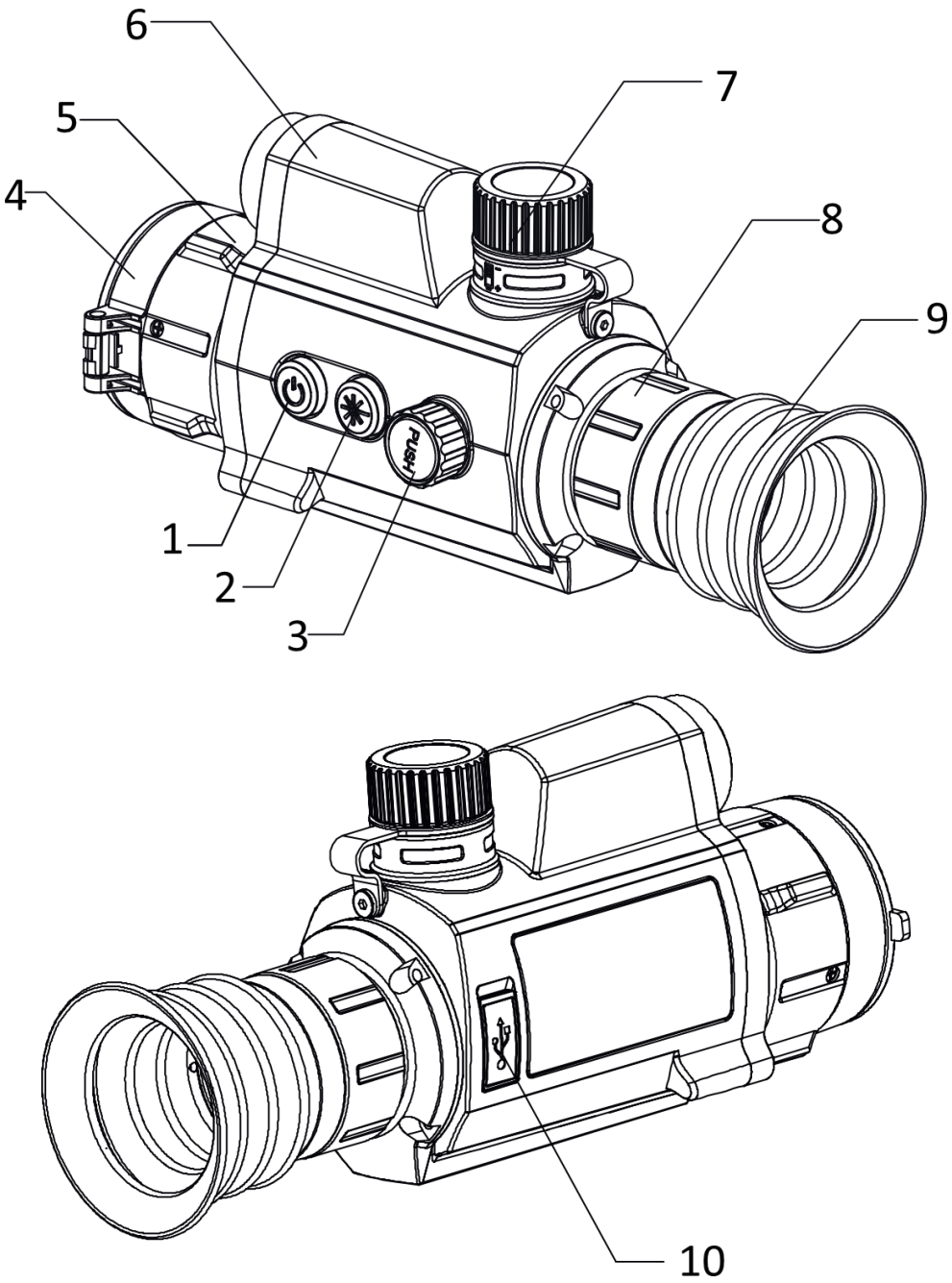

Figure 1-1 Appearance I of the Device

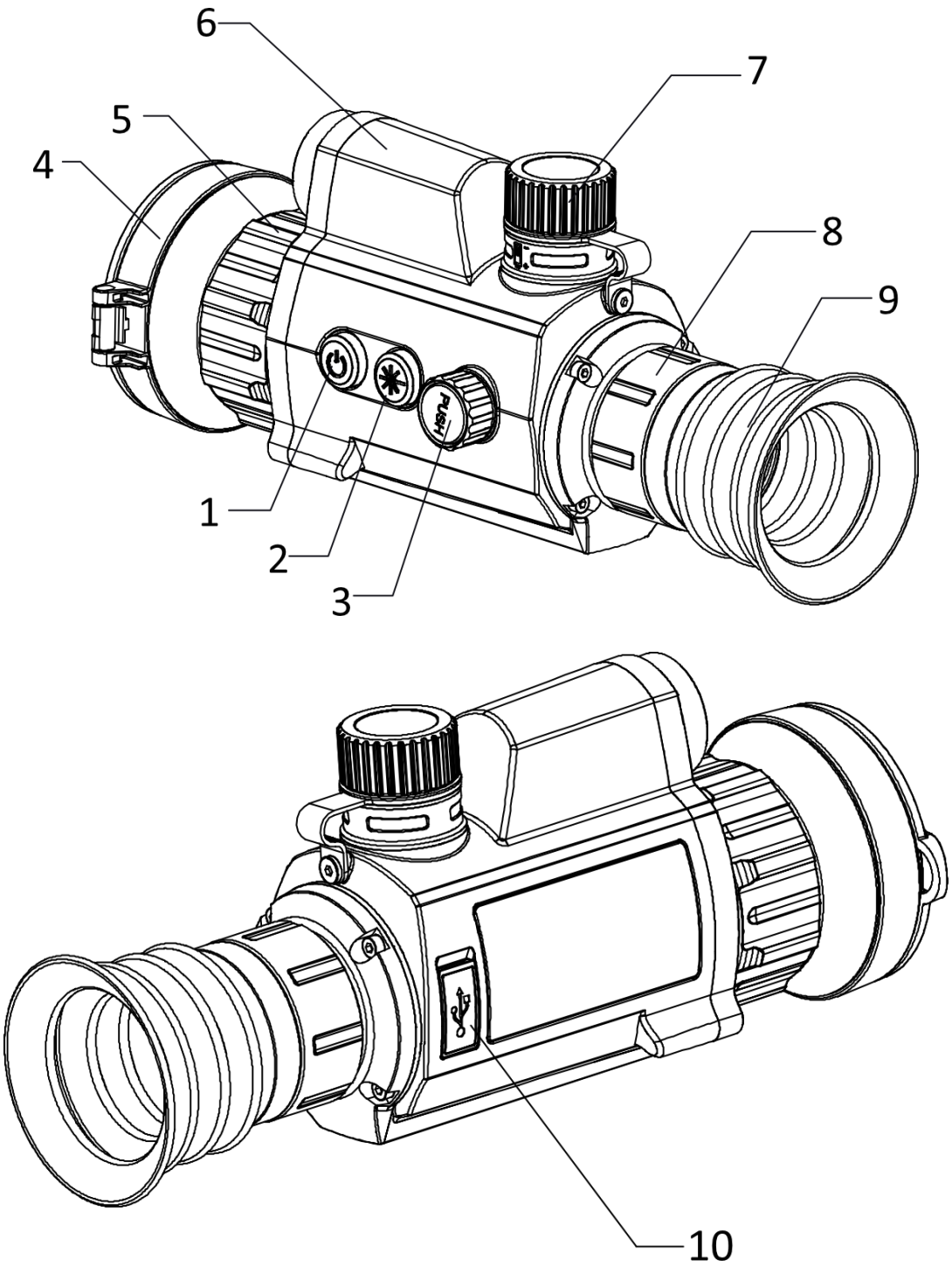

Figure 1-2 Appearance II of the Device

Table 1-1 Buttons and Components

No.	Description	Function
1	Power Key	● Press: Standby Mode/Wake up Device ● Hold: Power On/Off

No.	Description	Function
2	Measure Key	● Press: capture ● Hold: measure the distance with laser
3	Wheel	● Press: switch palettes ● Hold: menu operation ● Rotate: switch digital zoom
4	Lens Cover	Protect the lens.
5	Focus Ring	Adjust the sight view.
6	Laser Range Finder	Measure the distance with laser.
7	Battery Compartment	Install the battery in it.
8	Fixing Ring	Fix the eyepiece.
9	Eyepiece	View the target.
10	Data Exchange Interface	Connect with the output cable.
2 + 3	Measure Key + Wheel	Press at the same time to start or stop recording.
1 + 2 + 3	Power Key+ Measure Key + Wheel	Press at the same time to enter the hidden menu.

Chapter 2 Preparation

2.1 Cable Connection

Connect the device and power adaptor with a type-C cable to power on the device. Alternatively, connect the device and PC to export files.

Steps

1. Lift the cable interface cover.
2. Connect the device and power adapter with a Type-C cable to power on the device. Alternatively, connect the device and PC to export files.

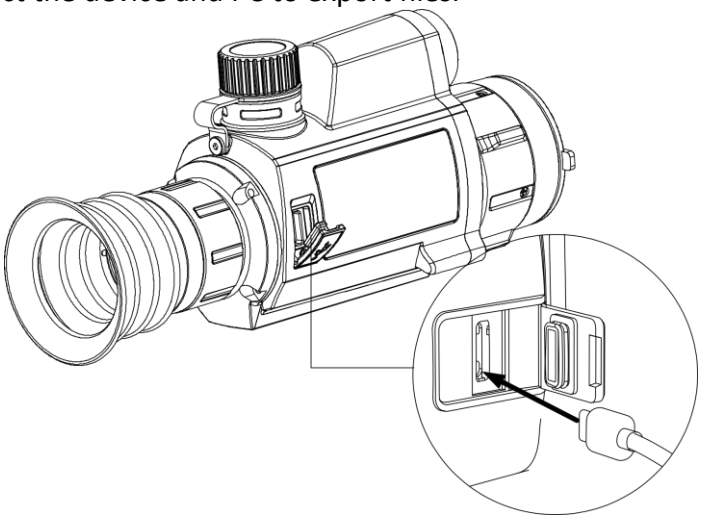

Figure 2-1 Cable Connection

2.2 Install Battery

Insert the batteries into the battery compartment.

Steps

1. Turn the battery cover anticlockwise to loosen it.

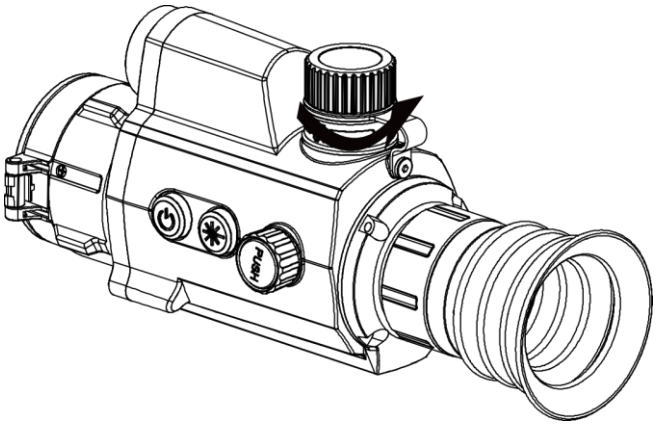

Figure 2-1 Open the Battery Cover

2. Insert the battery into the battery compartment with the positive mark inward.

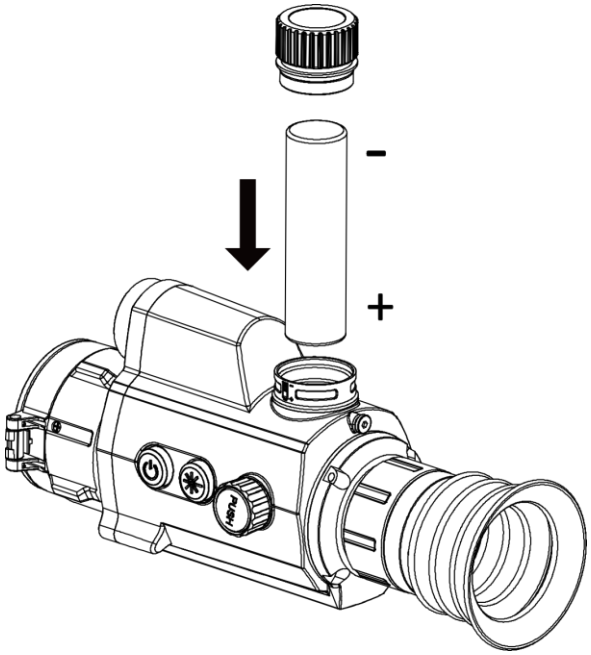

Figure 2-2 Install the Battery

3. Turn the battery cover clockwise to tighten it.

Note

Remove the battery from the battery compartment if the device is not used for a long time.

2.3 Power On/Off

Power On

When the battery is enough, press ⏻ to power on the device.

Power Off

When the device is turned on, hold ⏻ for 2 seconds to power off the device.

Auto Power Off

You can set the auto power off time for your device.

Steps

1. Hold the wheel to go to the menu.
2. Rotate the wheel to select ⏻, and press the wheel to select the auto power off time as required.
3. Hold the wheel to save and exit.

Note

- See the battery icon for the electricity quantity. means the battery is fully charged, and means that the battery is low.
- When the low power note shows, charge the battery.

2.4 Menu Description

When the device is turned on, hold the wheel to show the menu.
In the menu, you can rotate the wheel to select functions, press the wheel to configure the selected function, and hold the wheel to exit the menu.

Figure 2-4 Menu Interface

Chapter 3 Image Settings

3.1 Adjust Diopter

Steps

1. Power on the device.
2. Open the lens cover.
3. Hold the device and make sure the eyepiece covers your eye.
4. Rotate the adjust ring until the OSD text or image is clear.

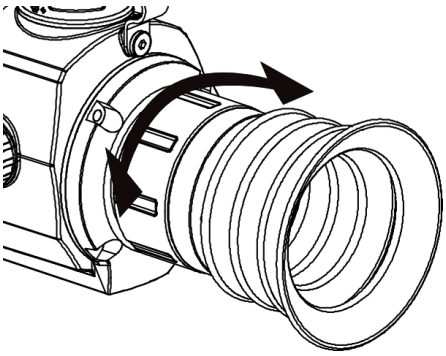

Figure 3-1 Adjust Diopter

Note

When adjusting diopter, DO NOT touch the surface of lens to avoid smearing the lens.

3.2 Adjust Focus

Steps

1. Power on the device.
2. Hold the device and make sure the eyepiece covers your eye.
3. Adjust the focus ring until the image is clear.

Note

When focusing, do not touch the surface of lens to avoid smearing the lens.

3.3 Adjust Brightness

In the menu mode, rotate the wheel to select and press the wheel to adjust brightness. In white hot mode, the higher the value of brightness is, the brighter the image is. The image effect in white hot mode is showed as picture below and effect in black hot mode is opposite.

Figure 3-1 Adjust Brightness in White Hot Mode

3.4 Adjust Contrast

In the menu mode, rotate the wheel to select and press the wheel to adjust image contrast.

3.5 Select Scene Mode

You can select proper scene mode according to actual using scene to improve the display effect.

Steps

1. Hold the wheel to go to the menu.
2. Rotate the wheel to select and press the wheel to switch scene mode.
   – refers to recognition mode and is recommended in normal scene.
   – refers to jungle mode and is recommended in hunting environment.
3. Hold the wheel to save settings and exit.

3.6 Set Palettes

You can select different palettes to display the same scene in different effects. Press the wheel in live view interface to switch palettes.

White Hot

The hot part is light-colored in view. The higher the temperature is, the lighter the color is.

Black Hot

The hot part is black-colored in view. The higher the temperature is, the more black the color is.

Red Hot

The hot part is red-colored in view. The higher the temperature is, the redder the color is.

Fusion

From high temperature to low temperature, the image is colored in from white, yellow, red, pink to purple.

3.7 Adjust Digital Zoom

In the live view interface, rotate the wheel to switch the digital zoom of the device. The value of digital zoom can be set to 1×, 2×, 4×, and 8×.

3.8 Correct Defective Pixel

The device can correct the defective pixels on the screen which are not performed as expected.

Steps

1. Hold the wheel to show the menu.
2. Rotate the wheel to select , and press the wheel to enter the DPC setting interface.
3. Press to switch the moving direction of the cursor, and rotate the wheel to move the cursor until it reaches the defective pixel.
4. Press to correct the defective pixel.

Note

The selected defective pixel can be magnified and displayed at the bottom right of the interface.

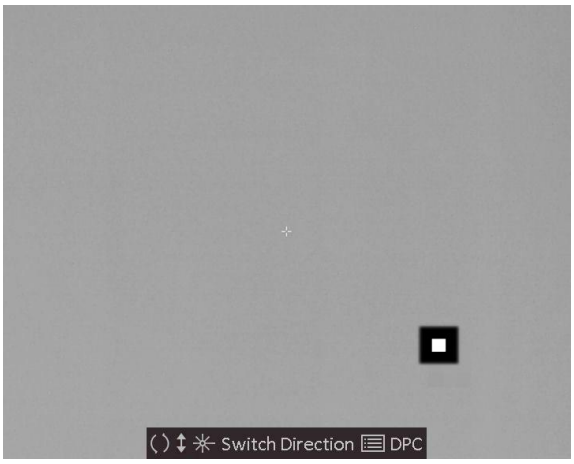

Figure 3-2 Correct Defective Pixel

3.9 Flat Field Correction

This function can correct non-uniformity of display.

Steps

1. Hold the wheel to enter the menu.
2. Rotate the wheel to select , and press the wheel to switch the FFC mode.
   - Manual FFC: Rotate the wheel to select , and press the wheel to correct the non-uniformity of display.
   - Auto FFC: The device performs FFC automatically according to the set schedule when switching on the camera.
   - External: Cover the lens cover, rotate the wheel to select , and the press the wheel to correct the non-uniformity of display.
3. Hold the wheel to exit.

3.10 Set Picture in Picture Mode

Steps

1. In the view mode, hold the wheel to show the menu.
2. Select and enter PIP mode. The details show in the upper left corner.
   - When reticle is enabled, the PIP view is the detail of reticle.
   - When reticle is not enabled, the PIP view is the detail of central part.
3. Press the wheel to switch the PIP type. **Up-Left**, **Center**, **Up-Right**, and **Close** are selectable.

Note

When you select **Up-Right** as PIP type, the OSD will be blocked.

Figure 3-3 Set Picture in Picture Mode

4. Hold the wheel to exit.

   If digital zoom is enabled, the PIP view also zooms. If the digital zoom ratio exceeds 4, the PIP does not zoom.

3.11 Set OSD

You can choose whether to display the OSD information on the live view interface in this function.

Steps

1. Hold the wheel to show the menu.
2. Rotate the wheel to select , and press the wheel to enter the OSD setting interface.
3. Rotate the wheel to select the OSD information you want to display or not.
4. Press the wheel to enable or disable the selected OSD information.

3.11.1 Synchronize Time

Steps

1. Hold the wheel to show the menu.
2. Rotate the wheel to select , and press the wheel to enter the time setting interface.
3. Press the wheel to switch the time system, and rotate the wheel to select the time and date to be synchronized.
4. Press the wheel to select the hour, minute, second, year, month, or day to be synchronized.
5. Rotate the wheel to change the hour, minute, second, year, month, or day selected, and press the wheel again to finish the setting.

5. Hold the wheel to save settings and exit.

Chapter 4 Burning Prevention

This function can prevent the detector of the thermal channel from being burned. When enabling this function, the shield will close if the grey scale of the detector reaches a certain value.

Steps

1. Hold the wheel to show the menu.
2. Rotate the wheel to select , and press the wheel to enable or disable the burn-prevention function.
3. Hold the wheel to save the settings and exit.

Note

When the burn-prevention function is disabled, the shield should be opened if it closes.

Chapter 5 Hot Tracking

The device can detect the highest temperature spot in the scene and mark it on display.

Steps

1. Hold the wheel to show the menu.
2. Rotate the wheel to select , and press the wheel to mark the spot of highest temperature.
3. Hold the wheel to save the settings and exit.

Result

When the function is enabled, ✣ displays in the spot of highest temperature. When the scene changes, the ✣ moves.

Figure 5-1 Highest Temperature Tracking

Chapter 6 Aiming Point Settings

6.1 Correct Reticle

Enable the reticle to aim at the target.

Steps

1. In the view mode, hold the wheel to show the menu.
2. Select . A reticle shows in the center of the view.
3. (Optional) Press the wheel to select the freeze function.

Note

When enabling the freeze function in reticle, you can adjust the position of the cursor on a frozen image. This function can prevent image flutter.

4. Rotate the wheel to select the reticle type. Then press the wheeel to confirm.

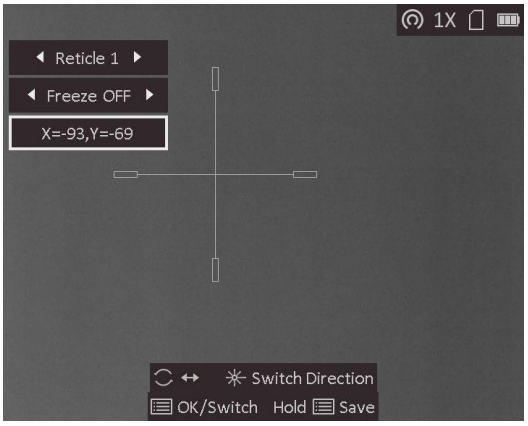

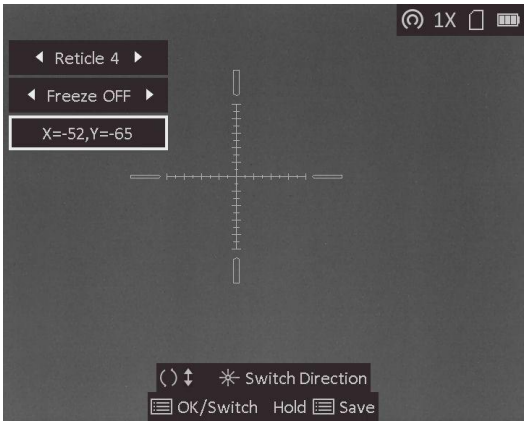

5. Press the wheel to select the coordinates. The coordinate shows the current position of the reticle.
6. Rotate the wheel to move the cursor, and press to switch the moving direction.

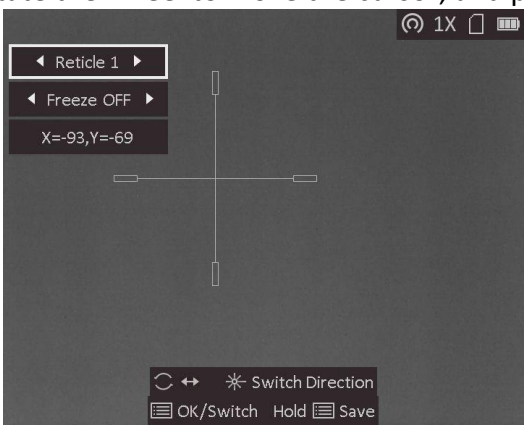

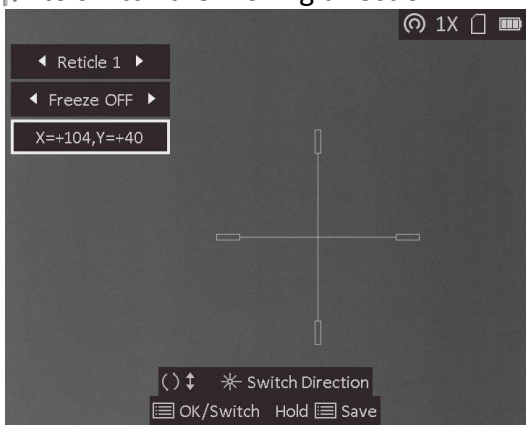

5. Hold the wheel to save and exit.

Note

- 5 types of reticles can be selected.
- If the PIP function is enabled, the aimed target can be magnified on the interface.

Figure 6-1 PIP Effect in Correcting Reticle

6.2 Correct Trajectory

Enable the trajectory correction to shot the target with high accuracy by marking the offset between the big reticle and small reticle.

Before You Start

Select the desired reticle type.

Steps

1. In the live view mode, hold the wheel to show the menu.
2. Select . Two reticles show in the view. The big one is reticle correction reticle, and the small one is trajectory correction reticle.
3. Set the distance.
   i. Press and rotate the wheel to select the distance No. There are 5 distances can be set.
   ii. Press and rotate the wheel to set the distance value.
   iii. Press the wheel to save the distance settings.
4. Set the reticle position of trajectory correction.
   i. Aim the big reticle at the target.
   ii. Shot and mark the actual drop point of the bullet.
   iii. Rotate the wheel to move the small cursor to the position of the actual drop point. Press to switch the moving direction of the small cursor. You can view the coordinate of the cursor in the view.
   iv. Press the wheel to save the coordinates of the current position.

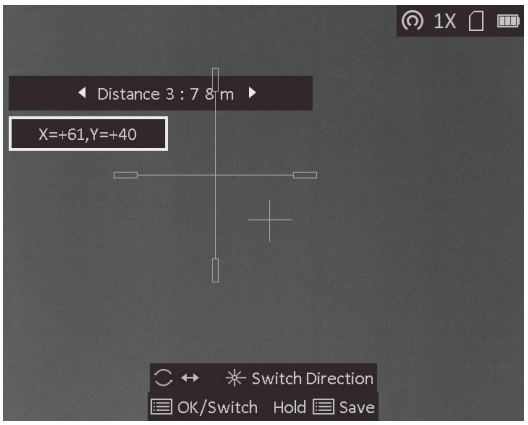

5. Rotate the wheel to switch to the next distance.
6. Repeat step 3 to 4 to set another trajectory correction position.
7. Hold the wheel save the settings and exit.

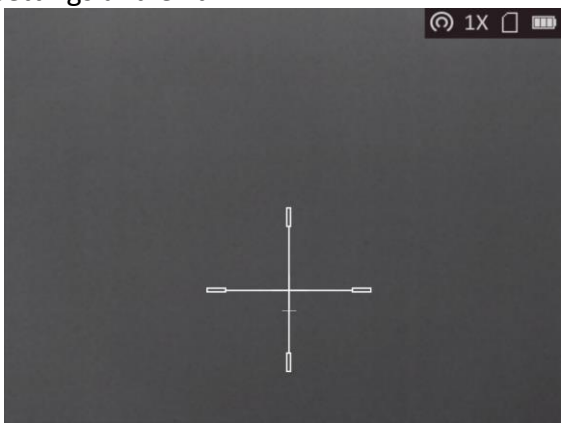

6.3 Set Reticle Color

The function can change the color of the reticle in reticle correction display, trajectory correction display, and distance measurement display.

Before You Start

Enable reticle correction first.

Steps

1. In the live view mode, hold the wheel to show the menu.
2. Select and press the wheel to switch the color of the reticle. **White**, **Green**, and **Red** are selectable.
3. Hold the wheel to save and exit.

Note

In black hot mode, if you set the reticle color as white, the reticle will display black automatically.

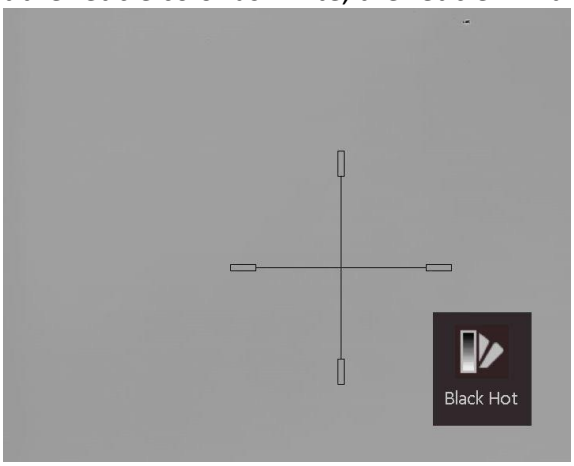

Figure 6-2 White Reticle in Black Hot Mode

Chapter 7 Measure Distance

The device can detect the distance between the target and the observation position with laser.

Before You Start

When measuring the distance, keep the hand and the position steady. Otherwise, the accuracy may be affected.

Steps

1. Hold the wheel to show the menu.
2. Rotate the wheel to select , and press the wheel to enable **Laser Ranging**.
3. Hold the wheel to return to the live view interface.
4. Aim the cursor at the target and hold to measure the target distance.

Result

The distance measurement result is displayed at the upper right of the image.

Figure 7-1 Distance Measurement Result

Chapter 8 Picture and Video

You can manually record video or capture picture when displaying live view.

8.1 Capture Picture

In the main live view interface, press to capture picture.

Note

When capturing succeeds, the image freezes for 1 second and a prompt shows on the display.
For exporting captured pictures, refer to ***Export Files***.

8.2 Record Video

Steps

1. In the live view interface, press and the wheel at the same time to start recording.

Figure 7-1 Start Recording

The left top of image displays the information of recording time.

2. Press and the wheel at the same time again to stop recording.

What to do next

For exporting recording files, refer to ***Export Files***.

8.3 Export Files

This function is used to export recorded videos and captured pictures.

Before You Start

- Turn off the hotspot function.
- Turn on the device after connecting it to your PC, and keep the device on for 10 to 15 seconds before other operations.

Steps

1. Connect the device and PC with a Type-C cable.

Note

Make sure the device is turned on when connecting the cable.

2. Open computer disk and select the disk of device. Go to the **DCIM** folder and find the folder named after the capture year and month. For example, if you capture a picture or record a video on June 2021, go to **DCIM → 202106** to find the picture or video.
3. Select and copy the files to PC.
4. Disconnect the device from your PC.

Note

- The device displays images when you connect it to PC, but functions such as recording, capturing and hotspot are disabled.
- When you connect the device to PC for the first time, it installs the drive program automatically.

Chapter 9 Client Software Connection

Connect the device to the T-Vision App via hotspot, then you can capture picture, record video, or configure parameters on your phone.

Steps

1. Hold the wheel to show the menu of device.
2. Press to enable hotspot function.
3. Turn on the WLAN of your phone and connect to the hotspot.
   - Hotspot Name: Wlan-IPTS Serial No.
   - Hotspot Password: the last 9 digits of serial No.
4. Scan the QR code to download and install the App.

Android System

iOS System

5. Open the App and connect your phone with the device. You can view the interface of device on your phone.

Note

- The device can not connect to the App if entering wrong password several times. Refer to ***Restore Device*** to reset the device, and connect the App again.
- The device should be activated for the first use. The default password must be changed after the activation.

Chapter 10 CVBS Output

View the device image on the display unit for details.

Before You Start

Connect the device to the display unit via CVBS interface of the aviation plug. Refer to Section ***Cable Connection***.

Steps

1. Hold the wheel to show the menu.
2. Select CVBS, and press the wheel to switch on CVBS.

Note

The CVBS cable is not included in the package, please purchase it by yourself.

10.1 Cable Connection

Connect the device with the aviation cable, and you can connect the device to your PC via USB interface or the monitor via the BNC interface.

Caution

- DO NOT drag the cables when you do the connecting, or when it is connected to the device.
- To plug in/out the cable, hold the cable end and then plug in/out it. DO NOT twist the cables, or the pins inside may be damaged.

Chapter 11 Language Settings

You can select the device language in this function.

Steps

1. Hold the wheel to show the menu.
2. Rotate the wheel to select , and press the wheel to enter the language configuration interface.
3. Rotate the wheel to select the language as required, and press the wheel to confirm.

Chapter 12 Maintenance

This part introduces the operation of checking device information, upgrading device, and restoring to defaults, etc.

12.1 View Device Information

Steps

1. Hold the wheel to show the menu of device.
2. Select , and press the wheel. You can view the device information such as version, and serial No.

12.2 Upgrade Device

Before You Start

- Please get the upgrade package (including Main Firmware and FPGA Firmware) first.
- Make sure the hotspot function is disabled.
- Turn on the device after connecting it to your PC, and keep the device on for 10 to 15 seconds before other operations.

Steps

1. Connect the device to your PC with cable, and then turn on the device.
2. Open the detected disk, copy the upgrade file and paste it to the root directory of the device.
3. Hold to reboot the device, and the device upgrades automatically. The upgrading process will be displayed in the main interface.

Note

During the upgrade, make sure the device is connected to your PC. Otherwise, it may cause unnecessary upgrade failure, firmware damage, etc.

4. Repeat the above steps to upgrade all firmware packages one by one.

12.3 Restore Device

Steps

1. Hold the wheel to show the menu of device.
2. Rotate the wheel to select , and press the wheel to restore the device to defaults according to the prompt.

Chapter 13 Frequently Asked Questions

13.1 Why is the monitor off?

Check whether the device is off-battery. Check the monitor after charging the device for 5 minutes.

13.2 The image is not clear, how to adjust it?

Adjust the diopter adjustment knob until the image is clear. Refer to section 3.1.

13.3 Capturing or recording fails. What's the problem?

Check the following items.
- Whether the device is connected to your PC. Capturing or recording is disabled in this status.
- Whether the storage space is full.
- Whether the device is low-battery.

13.4 Why the PC cannot identify the device?

Check the following items.
- Whether the device is connected to your PC with supplied USB cable.
- If you use other USB cables, make sure the cable length is no longer than 1 m.
- Whether the hotspot function is turned on. If so, go to device menu and turn off hotspot.

Chapter 14 Appendix

14.1 Device Command

Scan the following QR code to get device common serial port commands.
Note that the command list contains the commonly used serial port commands for HIKMICRO thermal cameras.

14.2 Device Communication Matrix

Scan the following QR code to get device communication matrix.
Note that the matrix contains all communication ports of HIKMICRO thermal cameras.

HIKMICRO

See the World in a New Way

Facebook: HIKMICRO Outdoor

Instagram: hikmicro_outdoor

YouTube: HIKMICRO

LinkedIn: HIKMICRO

UD25989B