APOLLO PRO

Thermal Imaging Clip-On System

OPERATION AND MAINTENANCE MANUAL

Important Export Restrictions! Commodities, products, technologies and services of this manual are controlled by the U.S. Department of State Office of Defense Trade Controls, in accordance with International Traffic in Arms (ITAR), Title 22, Code of Federal Regulations Part 120-130 and/or by the Export Administration Regulations (EAR) of U.S. Department of Commerce. At any time when a license or a written approval of the U.S. Government is applicable to it, it is illegal and strictly forbidden to export, intend to export, transfer in any other manner whatsoever, sell any hardware or technical data, provide any associated service to any non-U.S. resident, beyond or within the United States territory, until the valid license or written approval has been issued by the Departments of the U.S. Government having jurisdiction. Additionally U.S. law prohibits the sale, transfer, or export of items to certain restricted parties, destinations, and embargoed countries, as identified on lists maintained by the U.S. Department of State, the U.S. Department of Commerce, and the U.S. Department of Treasury. It is the responsibility of the Customer to be aware of these lists. The sale, transfer, transportation, or shipment outside of the U.S. of any product prohibited or restricted for export without complying with U.S. export control laws and regulations, including proper export licensing, documentation or authorization, is unlawful and may result in civil and/or criminal penalties and/or constitute a federal crime. Diversion contrary to U.S. law is strictly prohibited.

SAFETY SUMMARY

Before operating this product, carefully study this Operation and Maintenance Manual.

The Armasight Apollo PRO Thermal Imaging Clip-On System is a precision electro-optical instrument and requires careful handling. To avoid physical danger to the user and damage to the equipment, follow all WARNINGS, CAUTIONS, and NOTES.

Below are definitions of the alerts that will appear throughout this Manual:

WARNING – Identifies a clear danger to the person operating the equipment.

CAUTION – Identifies risk of damage to the equipment.

NOTE – Highlights essential procedures, conditions, and statements, or conveys important instructional data to the user.

The information provided in this manual is for familiarization purposes only. The contents may undergo further changes with no commitment by Armasight© to notify customers of any updates.
Armasight© assumes no responsibility for any misprints or other errors that this manual may contain.
© Armasight Inc. 2015

WARNING:

Always make sure your firearm is unloaded before you place the scope on the firearm. If you stop in the middle of mounting the scope, always verify that the chamber is empty before resuming. Safe handling rules should be followed at all times.

WARNING:

If the riflescope is mounted too far to the rear of the weapon, the shooter is at risk of injury from the eyepiece. Shooting at an uphill angle also increases this risk.

To avoid this potential hazard, we recommend positioning the riflescope as far forward in the mounts as possible. With hard-recoiling rifles, serious injury or even death can result if the eyepiece collides with the shooter during the discharge recoil process. Always install the riflescope as close to the front of the weapon as possible to allow the maximum distance for recoil..

NOTE: Pay special attention to this warning when shooting uphill and/or from a prone position. These shooting conditions can dramatically increase risk of injury. PLEASE maintain the maximum distance when shooting heavy recoiling and/or magnum firearms. THE USER ASSUMES ALL RESPONSIBILITY AND LIABILITY FOR HAVING THE RIFLESCOPE PROPERLY MOUNTED TO A FIREARM AND USING THE RIFLESCOPE CORRECTLY. ALWAYS CHECK THE CONDITION OF YOUR MOUNTING SYSTEM PRIOR TO USING YOUR FIREARM.

WARNING:

This product contains natural rubber latex, which may cause allergic reactions! The FDA has reported an increase in the number of deaths that are associated with an apparent sensitivity to natural latex proteins. If you are allergic to latex, it is a good idea to learn which products contain it and strictly avoid exposure to those products.

CAUTION:

- Do not dismantle the equipment.
- Keep the equipment clean. Protect it from moisture, dramatic temperature changes, and electrical shocks.
- DO NOT force the equipment controls past their stopping points.
- DO NOT leave the equipment activated during breaks in operation.
- DO NOT store the equipment with the batteries installed.
- Thoroughly clean and dry each item before placing them into the storage case.

CAUTION:

To prevent thermal damage to the equipment, never point it, either on or off, directly at the sun or any other source of high intensity light that the unprotected human eye cannot tolerate (such as a welding arc). To prevent inadvertent exposure to these types of sources, never leave the equipment with the objective lens cap off.

NOTES:

- Apollo PRO must be zeroed each time it is mounted to a **new** weapon.
- To avoid losing unsaved data, DO NOT remove the batteries or disconnect the external power source while the Apollo PRO is on.
- Inadvertent sun damage is not considered a defect in material or workmanship, and is therefore **not** covered in the product warranty.

LIST OF CONTENTS

TITLE	PAGE
Safety Summary	2
List of Contents	4
List of Figures	5
List of Tables	6
How to Use This Manual	6
1. INTRODUCTION	**7**
1.1 General Information	7
1.1.1 Type of Manual	7
1.1.2 Model Number and Equipment Name	7
1.1.3 Purpose of Equipment	7
1.1.4 Reporting Equipment Improvement Recommendations	8
1.2 Warranty Information and Registration	8
1.2.1 Warranty Information	8
1.2.2 Limitation of Liability	9
1.2.3 Product Warranty Registration	9
1.2.4 Obtaining Warranty Service	9
1.3 List of Abbreviations	10
2. DESCRIPTION AND DATA	**11**
2.1 System Description	11
2.2 Specifications	13
2.3 Standard Components	16
2.4 Optional Equipment	18
2.5 Key Features	19
3. OPERATING INSTRUCTIONS	**20**
3.1 Installation and Mounting	20
3.1.1 Battery Installation	20
3.1.2 Installing the Apollo PRO on a Picatinny/Weaver Rail	22
3.1.3 Clamping Device Adjustment	23
3.1.4 Installing the Apollo PRO on a Weapon Using the Optional FSRS System	23
3.1.5 Installing the Apollo PRO on the Lens of a Day Scope	25
3.1.6 Installing the Light Suppressor for a Day Scope	27
3.1.7 Fastening an Advanced Wireless Remote Control to a Weapon	27
3.1.8 Installing Additional Equipment	27
3.1.9 Connecting an Additional Equipment	27
3.1.10 Installing the 3x Magnifier	28
3.2 Controls and Display Indications	29
3.2.1 Controls	29
3.2.2 Main Menu	31
3.2.3 Display Indications	37
3.3 Operating Procedures	37
3.3.1 Operating	37
3.3.2 Bore Sighting the Apollo PRO	40
3.3.3 Apollo PRO Shut-Down	41

4. PREVENTIVE MAINTENANCE AND TROUBLESHOOTING **42**
4.1 Preventive Maintenance Checks and Services 42
4.1.1 Preventive Maintenance Checks and Services (PMCS) 42
4.2 Operator Troubleshooting 43
4.3 Maintenance 44
4.3.1 General 44
4.3.2 Cleaning Procedures 45
4.3.3 Bore Sighting 45
4.3.4 Battery Removal and Replacement 45
4.4 Return Instructions **46**
APPENDIX **47**
A Product Warranty Registration Card 47
B List of Spare Parts 48

LIST OF FIGURES

FIGURE	TITLE	PAGE
2-1	Apollo PRO Thermal Imaging Clip-On Systems Appearance	11
2-2	System Description	13
2-3	Standard Components	16
2-4	Optional Equipment	18
3-1	CR123 Battery Installation	20
3-2	Removing of the Battery Insert	21
3-3	AA Battery Installation	21
3-4	Mount Assembling	22
3-5	The Apollo PRO on a Picatinny Rail in Front of a Day Scope	22
3-6	Mount. Underside View	23
3-7	Optional FSRS System. Component Parts	24
3-8	Day Scope Mounted in FSRS System	24
3-9	Apollo PRO and Day Scope Mounted on FSRS System	25
3-10	The Apollo PRO Installed on the Lens of a Day Scope	25
3-11	Scope Mounting System	26
3-12	Estimation of the SMS Turning Angle	26
3-13	Light Suppressor for a Day Scope	27
3-14	Advanced Wireless Remote Control	27
3-15	Armasight Digital Recorder DT Installation	28
3-16	Video Cable	28
3-17	The Apollo PRO with a 3x Magnifier	28
3-18	Controls	29
3-19	Button Control Panel	30
3-20	Main Menu Navigation Buttons	31
3-21	Main Menu	31
3-22	Palette Menu	32
3-23	Reticle Menu	32
3-24	Boresight Menu	33
3-25	Enhancement Menu	33
3-26	Digital Contrast Correction	34

3-27	Sharpness Correction	34
3-28	Smart Scene Optimization	35
3-29	“Sky/Sea” Enhancement	35
3-30	Store Image Menu	35
3-31	Settings Menu	36
3-32	Power Down Menu	36
3-33	Status View	37
3-34	Setting Buttons	38
3-35	Reticle Patterns	39
4-1	Advanced Wireless Remote Control Battery Installation	45
B-1	Apollo PRO Spare Parts List	48

LIST OF TABLES

TABLE	TITLE	PAGE
2-1	System Description	13
2-2	System Data	13
2-3	Optical Data	14
2-4	Electrical Data	15
2-5	Mechanical Data	15
2-6	Environmental Data	15
2-7	Advanced Wireless Remote Control (AWREC) Data	15
2-8	Scope Mounting Systems Data	16
2-9	Standard Components	17
2-10	Optional Equipment	18
3-1	Controls and Indicators	29
3-2	Button Controls	30
3-3	Example of Calculating Boresight Corrections	40
4-1	Preventive Maintenance Checks and Services	42
4-2	Operator Troubleshooting	44
B-1	Apollo PRO Spare Parts List	49

HOW TO USE THIS MANUAL

USAGE

You must familiarize yourself with the entire manual before operating the equipment. Read the entire maintenance checklist before performing maintenance. Follow all WARNINGS, CAUTIONS, and NOTES.

MANUAL OVERVIEW

The Manual contains sections on operating and maintaining the Apollo PRO Thermal Imaging Clip-On Systems.

Throughout this Manual, the Apollo PRO Thermal Imaging Clip-On System will be referred to as the Apollo PRO, “the clip-on,” or “the equipment.”

The Product Warranty Registration Card is in Appendix A.

A List of Spare Parts is in Appendix B.

1

INTRODUCTION

1.1 GENERAL INFORMATION

1.1.1 TYPE OF MANUAL

Operation and Maintenance (including a List of Spare Parts)

1.1.2 MODEL NUMBER AND EQUIPMENT NAME

The equipment is available in the following versions that are structurally different in terms of thermal imaging cameras and objective lenses:

Apollo PRO SR 336 (30Hz) Thermal Imaging Clip-On System,
FLIR Tau 2 - 336x256 (17µm) 30Hz Core, 30mm Lens

Apollo PRO SR 336 (60Hz) Thermal Imaging Clip-On System,
FLIR Tau 2 - 336x256 (17µm) 60Hz Core, 30mm Lens

Apollo PRO MR 336 (30Hz) Thermal Imaging Clip-On System,
FLIR Tau 2 - 336x256 (17µm) 30Hz Core, 50mm Lens

Apollo PRO MR 336 (60Hz) Thermal Imaging Clip-On System,
FLIR Tau 2 - 336x256 (17µm) 30Hz Core, 50mm Lens

Apollo PRO MR 640 (30Hz) Thermal Imaging Clip-On System,
FLIR Tau 2 - 640x512 (17µm) 30Hz Core, 50mm Lens

Apollo PRO MR 640 (60Hz) Thermal Imaging Clip-On System,
FLIR Tau 2 - 640x512 (17µm) 60Hz Core, 50mm Lens

Apollo PRO LR 640 (30Hz) Thermal Imaging Clip-On System,
FLIR Tau 2 - 640x512 (17µm) 30Hz Core, 100mm Lens

Apollo PRO LR 640 (60Hz) Thermal Imaging Clip-On System,
FLIR Tau 2 - 640x512 (17µm) 60Hz Core, 100mm Lens

1.1.3 PURPOSE OF EQUIPMENT

The Apollo PRO family of Thermal Clip-On Systems showcases the best and latest advancements developed by Armasight in the field of uncooled thermal imaging technology for the dismounted soldier, special law enforcement team member, and professional hunter. The Apollo PRO epitomizes Armasight's 20/50 design gold standard. This means the equipment is capable of withstanding 20 meters of immersion for 2 hours, and engineered for routine use with 0.50 BMG weapon shock and recoil.

The Apollo PRO is a solid state, uncooled, long-wave infrared, 1x (unity magnification) Clip-on Thermal Imaging Device for day and night operations. It mounts directly in front of the variable magnification sniper day sight, without the need to remove the day sight from the weapon. Collateral applications of the Apollo PRO Thermal Imaging Device include functionality as a unity magnification (1x), standalone weapon sight and hand-held uncooled thermal monocular. For the collateral duty functions, Armasight has included a

compass and inclinometer in the Apollo PRO package for finer range estimation and target orientation. The Apollo PRO's high-performance thermal imaging system provides round-the-clock, all-weather detection and discrimination of heat-generating objects (such as animals), including those that are hidden. The Apollo PRO Clip-Ons are effective at close and long ranges, regardless of light and weather conditions (i.e., in total darkness or through smoke, haze, fog, and light rain).

Armasight has introduced a unique, dual battery option for the Apollo PRO Thermal Clip-On System consisting of either four 3.0VDC 123A batteries (all oriented in the same direction to prevent confusion in replacement), or four 1.5VDC AA batteries pre-loaded in a cartridge. The Extended Battery Pack or 6VDC/ 600mA power source can also be used to power the Apollo PRO.

The Apollo PRO can be controlled by a wireless remote control that fastens to the weapon.

Apollo PRO Clip-Ons are equipped with a standard NTSC/PAL video input/output function that makes it possible to connect to an external video display or monitor, or to record thermal images for field documentation or training purposes. It also allows the transmission of data from one remote display to that of the Apollo PRO.

Installing the Apollo PRO on a weapon is easy, repeatable, and reliable. It includes a user-friendly, MIL-STD-1913/ Weaver/Picatinny rail compatible, quick-release locking mechanism. This device is normally used in the "Reticule Off/ No Reticule" mode. However, when used as a 1x standalone weapon sight, the solid state technology reticule adjustments and software algorithms – combined with a complementary color reticle platform – ensure maximum reticle contrast, high-level target accuracy, and boresight retention that cannot be achieved with mechanical boresight adjusters and traditional ballistic drums. This level of accuracy is translated into the tracking electronic zoom (e-zoom) function of the Apollo Pro, when used as a 1x weapon sight, which can be progressively increased from 1x to 2x, to 4x and 8x (640x512 format only), without changing the point-of-aim to point of-impact relationship of the targeting reticle.

The Apollo PRO can be used in conjunction with other Armasight equipment, such as the Digital Video Recorder, Extended Battery Pack, and Advanced Modular Range Finder, which can be mounted on to the Picatinny/Weaver rail of clip-on.

Extremely reliable, the Apollo PRO is the most versatile and sophisticated Armasight product for hunters, SWAT teams, and military personnel.

1.1.4 REPORTING EQUIPMENT IMPROVEMENT RECOMMENDATIONS

User recommendations for improvements to the device are encouraged.

Mail your comments to:

Armasight Inc.
815 Dubuque Avenue
South San Francisco, CA 94080
USA

Or, send an email to ***info@armasight.com***.

1.2 WARRANTY INFORMATION AND REGISTRATION

1.2.1 WARRANTY INFORMATION

This product is guaranteed to be free from manufacturing defects in material and workmanship under normal use for a period of three (3) years from the date of purchase. This warranty does not cover the battery or damage caused by leaking batteries. Nor does it protect against damage due to loss, misuse or mishandling. Uncooled thermal camera sensor is warranted for a period of ten (10) years from the date of purchase.

In the event a defect that is covered by the warranty occurs during the 3 year period stated above, Armasight, at its option, will either repair or replace the product, and such action on the part of Armasight shall be the full extent of Armasight's liability, and the Customer's sole and exclusive remedy. This warranty does not cover a product (a) used in other than its normal and customary manner; (b) subjected to misuse; (c) subjected to alterations, modifications or repairs by the Customer or by any party other than Armasight without prior written consent of Armasight; (d) special order or "close-out" merchan-

dise or merchandise sold "as-is" by either Armasight or the Armasight dealer; or (e) merchandise that has been discontinued by the manufacturer and either parts or replacement units are not available due to reasons beyond the control of Armasight. Armasight shall not be responsible for any defects or damage that in, Armasight's opinion, is a result from the mishandling, abuse, misuse, improper storage or improper operation, including use in conjunction with equipment which is electrically or mechanically incompatible with or of inferior quality to the product, as well as failure to maintain the environmental conditions specified by the manufacturer.

This warranty is extended only to the original purchaser. Any breach of this warranty shall be waived unless the customer notifies Armasight at the address noted below within the applicable warranty period.

The customer understands and agrees that except for the foregoing warranty, no other warranties written or oral, statutory, expressed or implied, including any implied warranty of merchantability or fitness for a particular purpose, shall apply to the product. All such implied warranties are hereby and expressly disclaimed.

1.2.2 LIMITATION OF LIABILITY

Armasight will not be liable for any claims, actions, suits, proceedings, costs, expenses, damages or liabilities arising out of the use of this product. Operation and use of the product are the sole responsibility of the Customer. Armasight's sole undertaking is limited to providing the products and services outlined herein in accordance with the terms and conditions of this Agreement. The provision of products sold and services performed by Armasight to the Customer shall not be interpreted, construed, or regarded, either expressly or implied, as being for the benefit of or creating any obligation toward any third party or legal entity outside Armasight and the Customer. Armasight's obligations under this Agreement extend solely to the Customer.

Armasight's liability hereunder for damages, regardless of the form or action, shall not exceed the fees or other charges paid to Armasight by the customer or customer's dealer. Armasight shall not, in any event, be liable for special, indirect, incidental, or consequential damages, including, but not limited to, lost income, lost revenue, or lost profit, whether such damages were foreseeable or not at the time of purchase, and whether or not such damages arise out of a breach of warranty, a breach of agreement, negligence, strict liability or any other theory of liability.

1.2.3 PRODUCT WARRANTY REGISTRATION

In order to validate the warranty on your product, Armasight must receive a completed Product Warranty Registration Card for each unit, or the Customer can complete a warranty registration on our website at www.armasight.com. Please complete the included form (Appendix A) and immediately mail it to our Service Center:

Armasight Inc.
815 Dubuque Avenue
South San Francisco, CA 94080
USA

1.2.4 OBTAINING WARRANTY SERVICE

To obtain warranty service on your unit, the End-user must notify the Armasight's service department in order to receive a Return Merchandise Authorization number (RMA#). The customer can do this by sending an email to service@armasight.com.

When returning any product, please take or send the product, postage paid, with a copy of your sales receipt, to our service center, Armasight Inc. at the address noted above. All merchandise must be fully insured with the correct postage; Armasight will not be responsible for improper postage or missing or damaged merchandise during shipment.

When sending merchandise back, please write the RMA# clearly on the outside of the shipping box. Please include a letter that indicates your RMA#, Name, Return Address, reason for service return, Contact information (such as a valid telephone number and/or e-mail address), as well as proof of your purchases that will help us to establish the valid start date of the warranty. Product merchandise returns that do not have an RMA listed may be refused or be subject to a significant delay in processing.

Estimated Warranty service time is 10-20 business days. The End-user/Customer is responsible for post-

age to Armasight for any warranty service. Armasight will cover return postage/shipping to continental USA End-users/Customers after warranty repair only if product is covered by the aforementioned warranty. Armasight will return the product after warranty service via domestic ground service and/or domestic mail. The postage and shipping fees for any other requested, required or international shipping methods will be the responsibility of the End-user/Customer.

1.3 LIST OF ABBREVIATIONS

µm	micrometer
AWREC	Advanced Wireless Remote Control
C	Celsius (Centigrade)
CCW	counterclockwise
CW	clockwise
F	Fahrenheit
FL	Focal Length
g	gram
H	Height
hr	hour
in	inch
inf.	infinity
kg	kilogram
L	Length
lbs	pounds
m	meter
mA	milliampere
mil	angular mil
min	minute
mm	millimeter
MOA	Minute of Angle
mrad	milliradian
NO.	Number
NTSC	National Television Standards Committee
NUC	Non Uniformity Correction
OEM	Original Equipment Manufacturer
oz	ounce
PAL	Phase Alternating Line
PMCS	Preventive Maintenance Checks and Services
POI	Point of Impact
RMA#	Return Merchandise Authorization number
sec	second
SEQ	sequence
SOA	Second of Angle
SR	Service Representative
UCMNUC/FFC	User Controlled Manual Non Uniformity Correction/Flat-Field Correction
V	Volt
W	Width

2

DESCRIPTION AND DATA

2.1 SYSTEM DESCRIPTION

The Apollo PRO consists of two primary parts: a thermal imaging device and a mount. The equipment comes as shown in Figure 2-1, with the mount secured to the body of the device. The figure represents three versions of the equipment: with a 30mm focal length objective lens, with a 50mm focal length objective lens, and with a 100mm focal length objective lens.

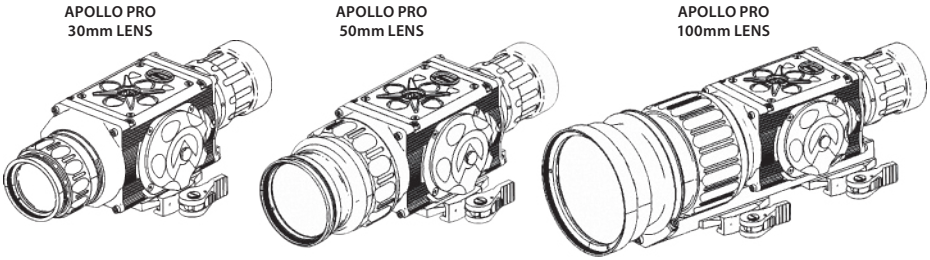

FIGURE 2-1. APOLLO PRO THERMAL IMAGING CLIP-ON SYSTEMS APPEARANCE

The Apollo PRO is a thermosensitive device equipped with an aiming reticle. The Apollo PRO senses differences in heat emitted by objects in its field of view, and converts temperature patterns into viewable images that represent the scene in contrasting black and white or color patterns, depending on the user's selected image palette.

NOTE:
It is important that the Apollo PRO sensor receive sufficient thermal contrast between the target and background area, or between the different parts of the target. For example, the vast temperature contrast between snow and any heat target (such as an animal) makes it very easy to distinguish the target.

The main optical-electronic components of the Apollo PRO include: an objective germanium thermal lens, an output lens, a thermal-imaging camera, a display, a control card, and a button control panel. The reticle is digitally displayed.

The Apollo PRO is equipped with a manual objective lens focus and digital boresight adjustment.

The Apollo PRO Thermal Clip-On System is includes simple and intuitive controls, functions, and features, such as direct button adjustments, direct combination button functions, and electronic menu selections.

To accommodate individual user needs, the Apollo PRO has a variety of digitally controlled options, such as:

- Digital Compass
- Digital Inclinometer
- Digital angle cosine indicator in %
- Display Brightness
- Palette Color Selection
- Digital Zoom
- Reticle ON/OFF Selection
- Reticle Color Selection
- Reticle Type Selection
- User-Controlled Manual Non-Uniformity Correction/ Flat-Field Correction (UCMNUC/ FFC)
- Boresight Adjustments
- Imaging Enhancements
- Custom Settings

All Apollo PRO Clip-Ons are based on FLIR Tau 2.7.2 or later cameras that allow for improvements in overall image quality in a wide range of dynamic thermal environments. The Apollo PRO has employed special, user-adjustable imaging tools that include:

- **Active Contrast Enhancement (ACE)** – a digital "Contrast" correction that allows for smart scene optimization based on dynamic adjustments, where a variety of contrast levels occur depending on relative scene temperature.
- **Second Generation Digital Detail Enhancement (DDE)** – a "Sharpness" correction that digitally enhances the picture, significantly sharpens edges, and further reduces image noise.
- **Smart Scene Optimization (SSO)** – a fine-tuning computational correction that significantly improves overall visual acuity for targets that have thermal signatures similar to the surrounding background.
- **Information-Based Histogram Equalization (IBHEQ)** – a "Sky/Sea" enhancement – information-based environment dependent algorithm that automatically adjusts camera gain and excludes pixels determined to not contain critical information. Specifically helpful in scenes with great expanses of visible sky or water.
- **User-Controlled Manual Non-Uniformity Correction/ Flat-Field Correction (UCMNUC/ FFC)**. There is a mechanical shutter between the camera sensor and the lens. This shutter is used to perform a non-uniformity correction (NUC), also known as flat-field correction (FFC). During FFC, the shutter presents a uniform temperature source to each detector element in the array. While imaging the flat-field source, the camera updates the offset correction coefficients, resulting in a more uniform image after the process is complete. All Helios models allow for user to manually trigger or interrupt scheduled UCMNUC/ FFC function.
- **Silent Shutterless NUC ™ (SSN**) – In addition to User-Controlled Manual NUC/ FFC, all Zeus models employ a digital, supplemental, non-mechanical flat-field correction that extends periods between mechanical shutter events and further reduces image noise. SSN is an always ON enhancement.

The Apollo PRO includes an electronic compass and inclinometer for target orientation. Information on the current operating state (digital compass and inclinometer data, battery status, active function, etc.) is continuously displayed, making field operation simple and convenient.

The Apollo PRO is manufactured for exceptional durability, with a lightweight and robust aluminum body. A side Picatinny/Weaver rail allows for the installation of an optional Armasight Digital Video Recorder DT, extended battery pack, laser range-finder, or other equipment.

A standard NTSC/PAL video input/output connector enables an external video display (monitor/ TV) or video recorder to be connected to the Apollo PRO. The quick-release mount fits any Picatinny, MIL-STD-1913, or Weaver weapon rail. The mount's lever-cam clamping device ensures quick, easy, and reliable mounting and removal.

The Apollo PRO is powered by four 3.0VDC 123A batteries, or four 1.5VDC AA batteries, both pre-loaded in a cartridge and facing the same direction.

Figure 2-2 shows the Apollo PRO with a 50mm lens. The ITEM NO. column of Table 2-1 indicates the number used to identify items in Figure 2-2.

NOTE:
The example shown here and below is the Apollo PRO with a 50mm lens.

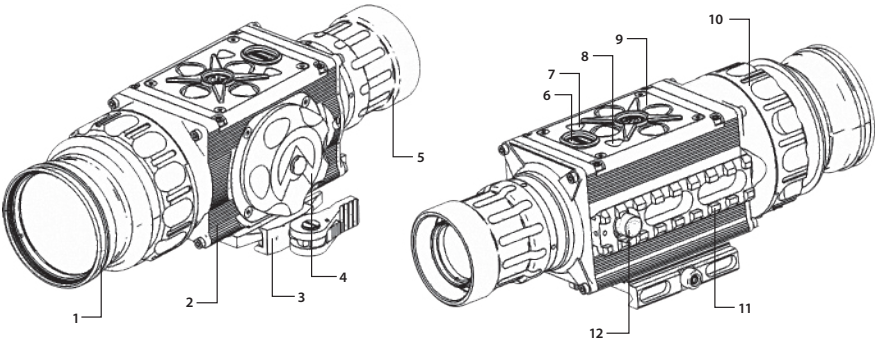

FIGURE 2-2. SYSTEM DESCRIPTION

TABLE 2-1. SYSTEM DESCRIPTION

ITEM	DESCRIPTION	ITEM	DESCRIPTION
1	Objective Lens	8	GPS Antenna
2	Body	9	Control Panel
3	Mount	10	Objective Focus Ring
4	Battery Cap	11	Side Picatinny/ Weaver Rail
5	Output Lens	12	Connector
6	POWER Button	13	Binder Connector Cap (not shown)
7	Bluetooth Antenna	14	Objective Lens Cap (not shown)

2.2 SPECIFICATIONS

TABLE 2-2. SYSTEM DATA

ITEM	APOLLO PRO SR 336	APOLLO PRO MR 336	APOLLO PRO MR 640	APOLLO PRO LR 640
Magnification	Unity (1x)			
Objective Lens Type	Germanium			
Focal Plane Array	FLIR Tau 2			
Frame Rate	30 Hz or 60 Hz			
Pixel Array Format	336×256		640×512	
Pixel Size	17 µm			
Resolution	0.57 mRad (118 SOA)	0.34 mRad (70 SOA)	0.34 mRad (70 SOA)	0.17 mRad (35 SOA)
Display Type	AMOLED SVGA 060			
Pixel Display Format	800×600			

TABLE 2-2. CONTINUED

ITEM	APOLLO PRO SR 336	APOLLO PRO MR 336	APOLLO PRO MR 640	APOLLO PRO LR 640
Display Brightness	Discretely Adjustable to 8 Levels			
Turn-on Time, max	3 sec			
Digital Zoom	1x, 2x, 4x		1x, 2x, 4x, 8x	
Digital Compass	Yes			
Digital Inclinometer	Yes			
Temperature Imaging Modes (Image Palettes)	White Hot, Black Hot, Sepia, Fusion, Rainbow, and Rain			
User-adjustable Image Enhancement Tools	•Active Contrast Enhancement (ACE) - "CONTRAST" •Second Generation Digital Detail Enhancement (DDE) – "SHARPNESS" •Smart Scene Optimization (SSO) – "SMART SCENE" •Information-Based Histogram Equalization (IBHEQ) – "SKY/SEA" •User-Controlled Manual Non-Uniformity Correction/ Flat-Field Correction (UCMNUC/ FFC) •Silent Shutterless NUC ™ (SSN)			
Reticle Type	6-Pattern Digitally Controlled: "Dot 4 MOA," "Line Dot," "Cross Center Dot," "Cross," "Crosshair," and "No Reticle"			
Reticle Color	Black, White, Red, Cyan			
Windage/Elevation Boresight Adjustment Type	Digitally Controlled			
Windage/Elevation Boresight Increment (NTSC)	1 MOA 0.3 mils 1in/100yd 3cm/100m	0.6 MOA 0.17 mils 0.62in/100yd 1.7cm/100m	1.2 MOA 0.34 mils 1.2in/100yd 3.4cm/100m	0.6 MOA 0.17 mils 0.6in/100yd 1.7cm/100m
Windage/Elevation Boresight Increment (PAL)	0.85 MOA 0.25 mils 0.9in/100yd 2.5cm/100m	0.5 MOA 0.14 mils 0.5in/100yd 1.4cm/100m	1 MOA 0.3 mils 1in/100yd 3cm/100m	0.5 MOA 0.15 mils 0.5in/100yd 1.5cm/100m
Windage Adjustment Range (NTSC/ PAL)	±80MOA / ±68MOA	±48MOA / ±40MOA	±96MOA / ±80MOA	±48MOA / ±40MOA
Elevation Adjustment Range (NTSC/ PAL)	±60MOA / ±51MOA	±36MOA / ±30MOA	±72MOA / ±60MOA	±36MOA / ±30MOA
Analog Video Input/ Output Format	NTSC* (640×480 pixels) / PAL (768×574 pixels)			

**Default setting (may be altered at the customer's request).*

TABLE 2-3. OPTICAL DATA

ITEM	APOLLO PRO SR 336	APOLLO PRO MR 336	APOLLO PRO MR 640	APOLLO PRO LR 640
Field of View (X/Y)	10.9° x 8.3°	6,6° x 5°	12,5° x 10°	6,2° x 5°
Objective Focal Length	30mm	50mm	50mm	100mm
Objective F-number	1:1.2	1:1.4	1:1.4	1:1.4
Exit Pupil Diameter	25mm	40mm	25mm	40mm
Focus Method	Manual			
Focusing Range	3m to inf.	5m to inf.	5m to inf.	10m to inf.

TABLE 2-4. ELECTRICAL DATA

ITEM	DATA
Battery	4 each 123A 3.0VDC or 4 each AA 1.5VDC
Battery Life at 20 °C (68 °F)	Up to 7 hrs
Extended Battery Pack	Two 18650 rechargeable batteries (3.7V), or four CR123 type rechargeable batteries with voltage 3.7V max, or four standard CR123A 3V Lithium batteries
External Power Supply	6 VDC/ 600mA

TABLE 2-5. MECHANICAL DATA

ITEM	APOLLO PRO SR 336	APOLLO PRO MR 336 APOLLO PRO MR 640	APOLLO PRO LR 640
Weapon Mount Type	Picatinny MIL-STD-1913 and Weaver Rails		
Overall Dimensions	190x76x76mm (7.4x3.0x3.0 in)	217x76x76mm (8.5x3.0x3.0 in)	287x90x100mm (11.3x3.5x3.9 in)
Height of the Clip-On Axis above Rail	40mm (1.57 in)		
Weight (w/o Batteries)	0.4 kg (0.88 lbs)	0.72 kg (1.6 lbs)	1.28 kg (2.8 lbs)

TABLE 2-6. ENVIRONMENTAL DATA

ITEM	DATA
Operating Temperature	-51 to +57°C (-59 to +134°F)
Storage Temperature	-57 to +85°C (-70 to +185°F)
Recoil Resistance	0.50 BMG weapon shock and recoil
Environmental Rating	Waterproof, 20 meters immersion for 2 hours

TABLE 2-7. ADVANCED WIRELESS REMOTE CONTROL (AWREC) DATA

ITEM	DATA
Type	Wireless Remote Control
Working Range	up to 0.5m
Battery	Single CR2032 Lithium battery (3V)
Battery Life at 20 °C (68 °F)	Approx. 10,000 clicks
Overall Dimensions	48×39×18 mm (1.9″×1.5″×0.7″)
Weight (with Battery)	25 g (0.9 oz)
Operating Temperature	-30 to +50°C (-22 to 122°F)
Storage Temperature	-50 to +70°C (-58 to 158°F)
Environmental Rating	Water and Fog-Resistant

TABLE 2-8. SCOPE MOUNTING SYSTEMS DATA

SCOPE MOUNTING SYSTEM	WEIGHT, G	OVERALL DIMENSIONS, MM	DIAMETER OF THE INSERTS, MM	CLEAR APERTURE OF DAY SCOPE LENS, MM	EXAMPLE OF THE SCOPES
Scope Mounting System 1	53	39.5×43×52.4	25,4	20; 24	Leupold 1.5-5x20 PR
			30,0		Leupold 1.5-5x20 MR/T M2; Zeiss 1.1-4x24T
Scope Mounting System 2	61	44×49×62	38,0	32; 36	Meopta Artemis 2000 4x32
			42,0		Leupold Mark 4 3-9x36; Leupold Mark 4 2.5-8x36; Kahles 4x36
Scope Mounting System 3	71	44×57.5×71	46,7	40; 42	Leupold 3.5-10x40; Leupold VX-II 3-9x40
			48,0		Zeiss 1.5-6x42; Swarovski PV-N 2.5-10x42
			48,7-49,0		Meopta Artemis 3000 3-9x42
			49,5		Meopta Artemis 3000 4-12x40
			50,0		Schmidt&Bender 10x42
Scope Mounting System 4	82	44x65.5x79	56,0	50	Zeiss 2.5 10x50
			57,0		Schmidt&Bender 3-12x50
			58,7		Leupold 4.4-14x50; Leupold VX-III 3.5-10x50
Scope Mounting System 6	93	44x70.5x84	62,0	56	Zeiss 3-12x56; Swarovski 2.5-10x56; Kahles CSX 3-12x56

2.3 STANDARD COMPONENTS

The Apollo PRO standard components are shown in Figure 2-3 and listed in Table 2-9.
The ITEM NO. column indicates the number used to identify items in Figure 2-3.

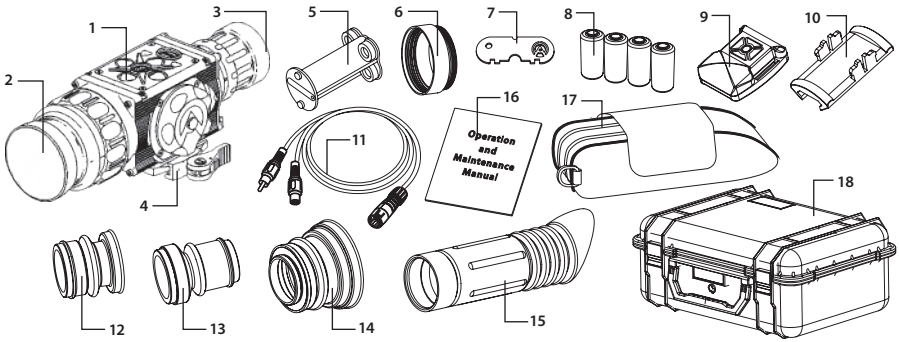

FIGURE 2-3. STANDARD COMPONENTS

TABLE 2-9. STANDARD COMPONENTS

ITEM NO.	DESCRIPTION	QUANTITY
1	**Armasight Apollo PRO Thermal Imaging Clip-On System** A thermal imaging aiming device. Comes fully assembled with a quick-release Picatinny/Weaver mount.	1
2	**Objective Lens Cap** Securely protects the objective lens from dirt and mechanical damage, and provides thermal protection. Comes attached to the objective lens.	1
3	**Output Lens Cap** Securely protects the output lens from dirt and mechanical damage.	1
4	**Mount** A quick-release mount used to install the Apollo PRO on a Picatinny/Weaver rail. Comes attached to the device.	1
5	**Battery Cartridge** Intended for the installation of four AA batteries in the battery compartment.	1
6	**Battery Box Extender Ring** Extends the battery box for the installation of the battery cartridge with AA batteries.	1
7	**Armasight Key** A special key used to remove the battery cap insert.	1
8	**CR123A Lithium Battery** Four CR123A batteries,used to power the Apollo PRO.	4
9	**Advanced Wireless Remote Control (AWREC)** Duplicates the functions of the control panel buttons. Comes with a CR2032 (3V) battery installed.	1
10	**Picatinny Adapter for Advanced Wireless Remote Control** Allows the advanced wireless remote control to be installed on a weapon's Picatinny/Weaver rail.	1
11	**Video Cable** A cable used to connect the analog video input/output of the Apollo PRO to external display devices (monitor, TV) or power sources.	1
12	**Light Suppressor 1** A rubber cup mounted to the Apollo PRO output lens to reduce light scattering. Used when installing the Apollo in front of day scopes with lens housing outer diametersof 25.4 to 42 mm.	1
13	**Light Suppressor 2** A rubber cup mounted to the Apollo PRO output lens to reduce light scattering. Used when installing the Apollo in front of an ACOG 4×32 scope.	1
14	**Light Suppressor 3** A rubber cup mounted to the Apollo PRO output lens to reduce light scattering. Used when installing the Apollo in front of day scopes with outer lens housing diameters of 47 to 50 mm.	1
15	**Light Suppressor for Day Scope** A rubber cup mounted to the day scope's output lens to reduce light scattering and prevent surrounding light from interfering with the image.	1
16	**Operation and Maintenance Manual** Provides safety information, equipment description, mounting procedures, operating instructions, and preventive maintenance checks and services.	1
17	**Carrying Case** A textile bag used for the transportation and storage of the Apollo PRO and its accessories.	1
18	**Hard Shipping/Storage Case** A protective case used for the shipping/ storage of the Apollo PRO and its accessories.	1

2.4 OPTIONAL EQUIPMENT

The ITEM NO. column indicates the number used to identify items in Figure 2-4.
The PART NO. column indicates the primary number used by the manufacturer to identify an item.

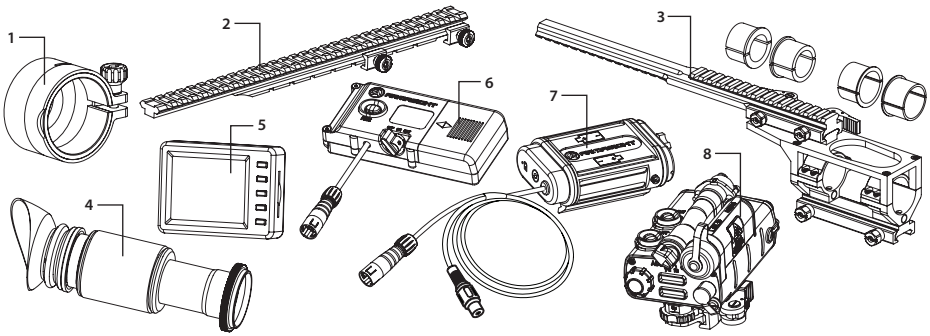

FIGURE 2-4. OPTIONAL EQUIPMENT

TABLE 2-10. OPTIONAL EQUIPMENT

ITEM NO.	DESCRIPTION	PART NO.
1	**Scope Mounting System 1 #40** A mounting system used to install the Apollo PRO on the lenses of specified day scopes. Includes a clamp with inserts that will fit 25.4 and 30mm diameters.	ANAM000009
-	**Scope Mounting System 2 #41** A mounting system used to install the Apollo PRO on the lenses of specified day scopes. Includes a clamp with inserts that will fit 38 and 42mm diameters.	ANAM000010
-	**Scope Mounting System 3 #42** A mounting system used to install the Apollo PRO on the lenses of specified day scopes. Includes a clamp with inserts that will fit 46.7, 48, 48.7-49, 49.5, and 50mm diameters.	ANAM000011
-	**Scope Mounting System 4 #43** A mounting system used to install the Apollo PRO on the lenses of specified day scopes. Includes a clamp with inserts that will fit 56, 57, and 58.7mm diameters.	ANAM000012
-	**Scope Mounting System 6 #44** A mounting system used to install the Apollo PRO on the lenses of specified day scopes. Includes a clamp with inserts that will fit 62mm diameter.	ANAM000013
2	**Extended Rail Adapter #85** A mounting system used to install a day scope behind the Apollo PRO on a weapon, using a short-mounting Picatinny/ Weaver rail.	ANAM000045
3	**FSRS Front Scope Rail System #38** A mounting system used to install a day scope behind the Apollo PRO on a weapon, using a short-mounting Picatinny/ Weaver rail.	ANAM000021
4	**3x Magnifier** Converts the Apollo PRO into a 3x thermal imaging device for long-range observation.	ANLE3X0008
5	**HD DVR Digital Video Recorder** A compact digital system used for HD video recording, storage and playback.	ATAM000005

ITEM NO.	DESCRIPTION	PART NO.
6	**Recorder DT Digital Video Recorder** A compact digital system used for video recording, storage and playback. Can also serve as an external power source. Equipped with a remote control.	ATAM000004
7	**Extended Battery Pack** A power source for extended operational time. Takes four CR123A Lithium batteries (3V), CR123 rechargeable batteries (3.2V or 3.7V), or two 18650 rechargeable batteries (3.7V).	ATAM000008
8	**AMRF2200 Advanced Modular Range Finder** The modular range finder is designed to determine the exact distance between the observer and the target. Measurement results are shown on both the module display and in the digital device's FOV.	IALA00AMRF22001

2.5 KEY FEATURES

- **Converts your day scope, sight, or binoculars into a thermal imaging device**
- **Mounts in front of any day scope with no re-zeroing required**
- **24/7 Operation in presence of environmental obscurants (smoke, dust, haze, fog)**
- **Superior engineering and design meeting Armasight's 20/50 gold standard**
- **Rugged MIL-STD-810 compliant performance**
- **Operates on 123A or AA batteries**
- **Reliable quick-release locking weapon mount**
- **Objective Germanium Lens Options**
- **TAU-2 17µm Pitch Thermal Sensor**
- **SVGA 800x600 OLED Display**
- **Digital Compass**
- **Digital Inclinometer**
- **Digital Angle Cosine Indicator**
- **Battery Status Indicator**
- **Selectable Palettes: White Hot/ Black Hot/ Sepia/ OEM Custom/ Other Color Variants**
- **Imaging Filter Algorithms:**
  - **Active Contrast Enhancement™ (ACE)**
  - **Smart Scene Optimization™ (SSO)**
  - **Information-Based Histogram Equalization™ (IBHEQ)**
  - **Second Generation Digital Detail Enhancement™ (DDE)**
  - **Silent Shutterless Non-Uniformity Correction™ (SSN)**
- **Wireless 5-button Remote**
- **Tracking Digital e-Zoom: 2x/ 4x/ 8x (640x512 only)**
- **Multiple User Selectable Ballistic and Quick Acquisition Reticules**
- **Selectable Reticule Color**
- **Still Picture and Video Recording Capabilities (Mounted DVR Option)**
- **Analog video input and output (NTSC/PAL)**
- **Power input capability**
- **Serviceability under severe conditions**
- **Filled with dry nitrogen to prevent internal fogging**
- **Waterproof**
- **Limited 3-year warranty**
- **10-year warranty on FLIR detector**
- **Made in the USA**

3

OPERATING INSTRUCTIONS

3.1 INSTALLATION AND MOUNTING

3.1.1 BATTERY INSTALLATION

CAUTION:
Verify that the equipment is off before installing batteries.

The Apollo PRO is capable of operating on either four (4) CR123A 3.0VDC format lithium batteries OR four (4) AA 1.5VDC format batteries. Using the four (4) CR123A 3.0VDC batteries, the operator can expect approximately 6½ hours of continuous operation, contingent upon the quality and freshness of the batteries installed. Using the four (4) AA 1.5VDC batteries, the operator can expect approximately 3 hours of continuous operation, contingent upon the quality and freshness of the batteries installed.

Please note that regardless of installing CR123 or AA format batteries, the battery polarity orientation is ALWAYS the same for all of the batteries – positive terminal outboard (+ terminal toward the battery cap).

INSTALLATION OF CR123A 3.0VDC BATTERIES:

To install four (4) CR123A batteries, do the following (refer to Figure 3-1):

1. Unscrew the battery cap (A).
2. Insert the batteries (B) directly into the battery case with ALL positive terminals facing upward (or in the direction of the battery cap)
3. Replace the battery cap.

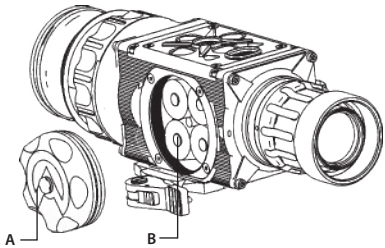

FIGURE 3-1. CR123 BATTERIES INSTALLATION

NOTE:
In a situation where fewer than four (4) CR123A batteries are available, the Apollo PRO can operate, for a very limited time, on as few as one (1) CR123A battery installed in any of the battery slots.

INSTALLATION OF AA 1.5VDC BATTERIES:

Install four (4) AA batteries as follows (refer to Figure 3-3):

In order to use four (4) AA batteries in the Apollo PRO, it will be necessary to make a few minor adjustments and to use an AA cartridge device to hold the batteries in place. All of the necessary adapters, tools and equipment are included as standard kit items to perform this function.

1. Unscrew the battery cap.
2. Using the ARMASIGHT key (A, Figure 3-2), remove the battery cap insert (B, Figure 3-2) from the battery cap (C, Figure 3-2).

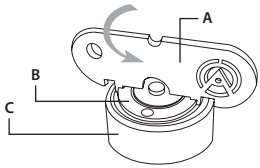

FIGURE 3-2. REMOVING OF THE BATTERY INSERT

3. Install battery box extender ring (A, Figure 3-3):
4. Insert four (4) AA batteries (B) into the battery cartridge (C) with all of the batteries oriented in the same direction. The negative (-) terminals should be against the cartridge springs.
5. Insert battery cartridge into the battery box.

NOTE:
The cartridge will only fit in one orientation.

6. Replace the battery cap (D) by threading it into the battery case extender.

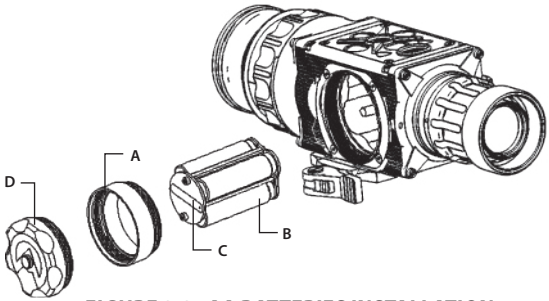

FIGURE 3-3. AA BATTERIES INSTALLATION

NOTE:
In a situation where fewer than four (4) AA batteries are available, the Apollo PRO can operate, for a very limited time, on as few as three (3) AA batteries installed in any of the battery cartridge slots.

WARNING:

Pay close attention to the AA battery orientation when installing them into the battery cartridge. Failure to do so will result in batteries overheating and possible damage to the cartridge.

3.1.2 INSTALLING THE APOLLO PRO ON A PICATINNY/WEAVER RAIL

WARNING:

Always make sure your firearm is unloaded before you place the scope on the firearm. If you stop the procedure, always verify that the chamber is empty before resuming installation. Safe weapon handling rules should be followed at all times.

The Apollo PRO comes fully assembled with two Picatinny/Weaver mounts (Figure 3-4).
The mount (A) is attached to the Clip-On seating rail (B) with two flathead socket cap screws (C).

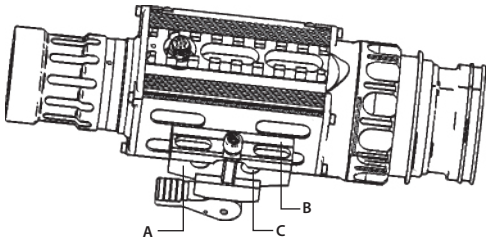

FIGURE 3-4. MOUNT ASSEMBLING

Figure 3-5 shows the Apollo mounted on an Extended Rail Adapter in front of a day scope.

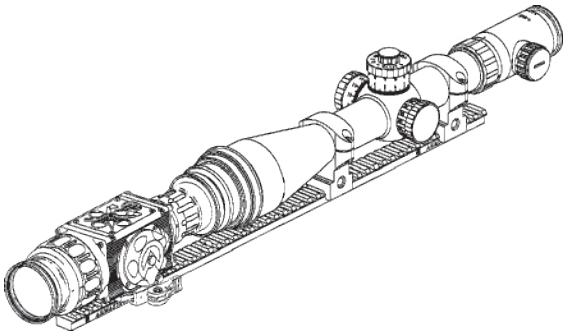

FIGURE 3-5. THE APOLLO ON A PICATINNY RAIL IN FRONT OF A DAY SCOPE

To install the Apollo PRO on a Picatinny/Weaver rail, do the following:

1. Unlock the clamping device (A, see Figure 3-6) of the Clip-On mount by pushing down on the lever holders (B) and unlocking them (C).
2. Install the Clip-On on the Picatinny/Weaver rail so that the stop (D) slides into the transverse slots on the rail.
3. Affix the Clip-On to the rail by locking the levers (C).
4. Verify that the clamping device is firmly holding the Apollo PRO. If necessary, adjust the clamping device's lever-cam locks as detailed in Part 3.1.3 (Clamping Device Adjustment).

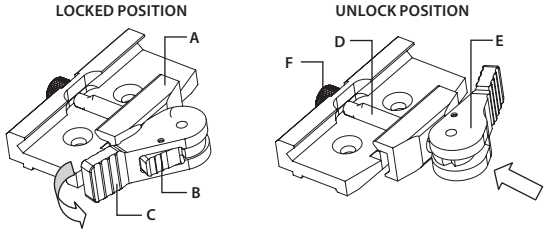

FIGURE 3-6. MOUNT. UNDERSIDE VIEW

3.1.3 CLAMPING DEVICE ADJUSTMENT

To adjust the mount's clamping device, do the following:

1. Remove the Apollo PRO from the weapon.
2. With the clamping device unlocked (as shown in Figure 3-6), push the cam (E) towards the arrow, which will cause the nut (D) to slide out of its hole.
3. To tighten/ loosen the clamping device, push down on the cam (E) and turn the nut (F) CW/ CCW respectively, in one-two increments (see note below). Much like when the cam (E) is released, backward-moving springs will cause the nut (F) to slide back into its hole.

> **NOTE:**
> The eight-sided nuts of the mount's lever-cam locks will only fit into their holes if turned in one of the discrete positions, using increments equal to 360°/8.

4. Verify that the adjusted lever-cam lock is securely holding the weapon's mounting rail.
5. Repeat the procedure to adjust the clamping device's second lever-cam lock.

> **NOTE:**
> The quick-release rail grabbers can be removed and repositioned in other discrete locations to allow the operator to move the Apollo PRO forward or aft for improved ergonomics. Simply remove the two Allen-head screws from each mount and, after applying removable Loctite or an equivalent threadlock, fasten them down in the desired position.

3.1.4 INSTALLING THE APOLLO PRO ON A WEAPON USING THE OPTIONAL FSRS SYSTEM

The FSRS system is delivered fully assembled. The components of the FSRS system are shown in Figure 3-7.

A. Dismantling the FSRS System

To dismantle the FSRS system, do the following (see Figure 3-7):

1. Unlock the clamping device (D) and remove the extension mount (E) from the bridge (B).
2. Unscrew the screws (C) and remove the bridge (B) from the mount (H).
3. Unscrew the screws (F) and remove the clamps (G).

B. Mounting the Day Scope

Figure 3-7 shows the day scope mounted to the FSRS system.

Mount the day scope to the FSRS system as follows:

1. Loosen the nuts (A, Figure 3-7). Install the mount (H) on the weapon's Picatinny/Weaver rail. The two pins of the mount's clamping device should be secured in the transverse slots of the rail. Manually retighten the nuts (A).

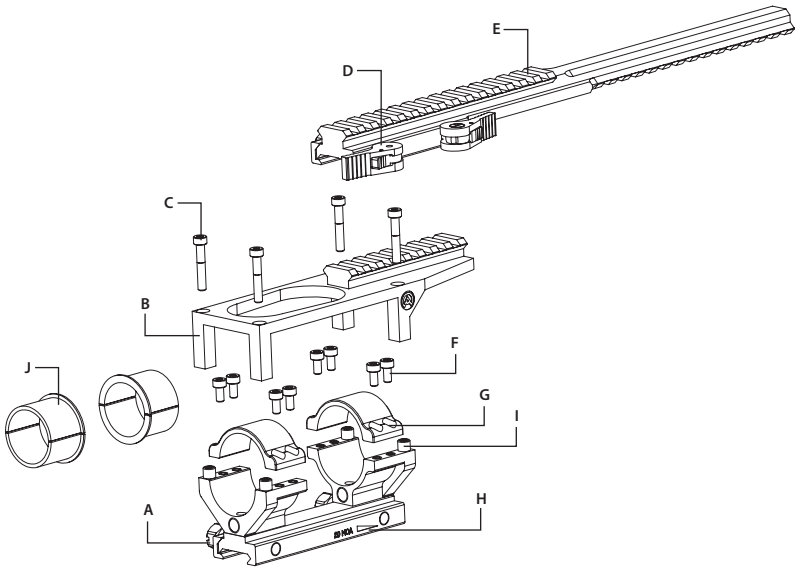

FIGURE 3-7. OPTIONAL FSRS SYSTEM. COMPONENT PARTS

NOTE:

Pay attention to the arrow engraved on the right side of the mount (H).
The arrow must be pointed towards the end of the weapon muzzle.

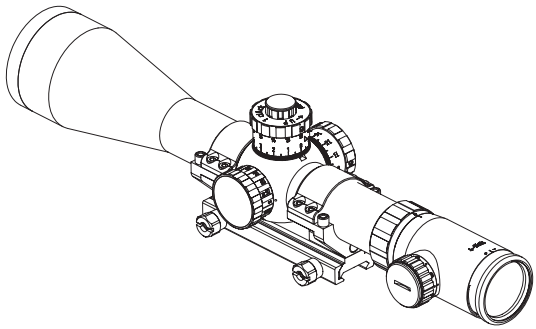

FIGURE 3-8. DAY SCOPE MOUNTED ON FSRS SYSTEM

2. Without tightening the screws (F), use the clamps (G) to fasten the scope into the mount (H) with a 34mm diameter, as seen in the preassembled equipment. To mount day scopes with diameters of 30mm or 25.4mm, use the corresponding inserts (J).
3. Adjust or reposition the mount (H) along the weapon rail until you find the most comfortable position over your eye. Readjust until the crosshairs are level, and are not tilted. After positioning the scope in the mount (H), apply a small amount of threadlock to the threads, and tighten the screws (F) using a 3mm hex key.
4. Tighten the nuts (A) with a screwdriver to secure the mount (H) to the weapon rail.

C. Mounting the Apollo PRO and Additional Equipment

Figure 3-9 shows the Apollo PRO and day scope mounted to the FSRS system.

To mount the Apollo PRO and additional equipment to the FSRS system, do the following:

1. Install the bridge (B, Figure 3-6) on the bushes (I, Figure 3-6). After applying a small amount of thread-lock to the threads, install and tighten the screws (C, Figure 3-6) using a 3mm hex key.
2. Unlock the clamping devices (D, Figure 3-6). Install the extension mount (E, Figure 3-6) onto the Weaver rail of the bridge (B). Verify that the clamping device is secured to the extension mount. If necessary, adjust the clamping device as detailed in Part 3.1.3.
3. Install the Apollo PRO (A, Figure 3-9) onto the Weaver rail (B), underneath the extension mount, as shown in Part 3.1.3.
4. Affix additional equipment to the mount's top Weaver rail (C, Figure 3-9).

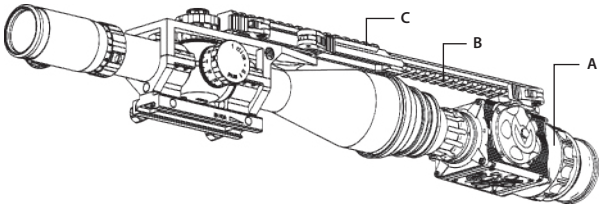

FIGURE 3-9. APOLLO PRO AND DAY SCOPE MOUNTED ON FSRS SYSTEM

After you have completed these steps, remounting the equipment without reinstalling the mount only requires that you remove the extension mount (with the equipment installed) from the bridge.

3.1.5 INSTALLING THE APOLLO PRO ON THE LENS OF A DAY SCOPE

Use the optional Scope Mounting System (SMS) to install the Apollo PRO on day scope lenses.

NOTE:

The adapters differ in attaching diameters and must fit with the day scope parameters specified in Table 2-8 (Scope Mounting Systems Data).

NOTE:

The Apollo PRO cannot be attached to scopes that include focus rings on the housing of the objective lens.

CAUTION:

Scope Mounting Systems are not recommended for installing the Apollo PRO on firearms with dynamic recoil (0.308 Win or stronger).

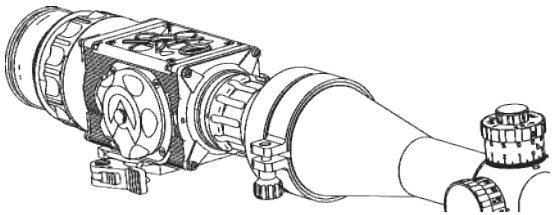

FIGURE 3-10. THE APOLLO PRO INSTALLED ON THE LENS OF A DAY SCOPE

Figure 3-9 shows the Apollo PRO installed on the lens of a day scope.

Install the Apollo PRO on the lens of a day scope as follows (refer to Figure 3-11):

1. Using a 2.5mm Allen key, unscrew the M4×8 screws securing the Apollo PRO mount. Remove the mount from the seating rail and place it, along with the screws, into the storage case.
2. Take off the output lens cap and put it into the storage case.
3. With the nut (B) loosened, place the insert (C) into the SMS's clamp (A).

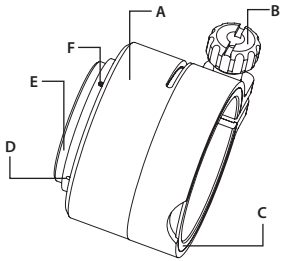

FIGURE 3-11. SCOPE MOUNTING SYSTEM

4. Screw the SMS into the Apollo's output lens thread.
5. With the nut (B) loosened, slide the Apollo PRO with the SMS onto the lens of the day scope as far as it goes.
6. Tighten the nut (B) using a screwdriver.

If the position of the SMS's clamping nut is uncomfortable, you can change it by doing the following:

1. Decide on desirable position of the nut and estimate the angle through which the SMS should be turned CW (see Figure 3-12).
2. Remove the SMS from the Apollo PRO.
3. Using a screwdriver, remove the M2×2.5 screws (F, Figure 3-11) and then unscrew the ring (E).

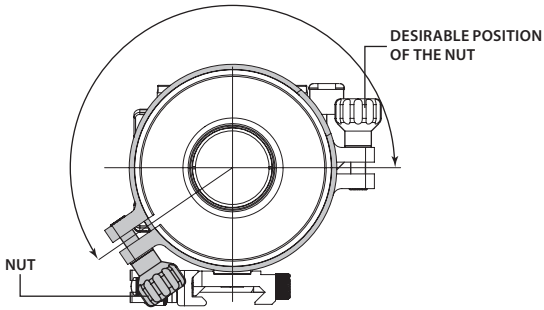

FIGURE 3-12. ESTIMATION OF THE SMS TURNING ANGLE

CAUTION:

To loosen the ring (E, Figure 3-11), use the two auxiliary non-threaded holes (D). DO NOT USE the threaded ones.

4. Using a lathe or other precision cutting tool, cut the inside face of the ring (E, Figure 3-11). The value of cuts (in millimeters) should be equal to the value of the turning angle (in angular degrees) divided by 360°.
5. Screw the ring (E) into the SMS's body with its cut end directed inwards. Tighten the screw.
6. After applying a small amount of threadlocker to the threads, affix the ring (E) using the two M2×2.5 screws (F).

3.1.6 INSTALLING THE LIGHT SUPPRESSOR FOR A DAY SCOPE

The Light Suppressor (A, Figure 3-13) slides over the eyepiece of your daytime scope (B). The suppressor can be used with scopes that have 40-43mm eyepiece diameters and a 100-120mm distance for eye relief .

The suppressor can be adjusted for eye relief by cutting the rubber at the desired distance (C).

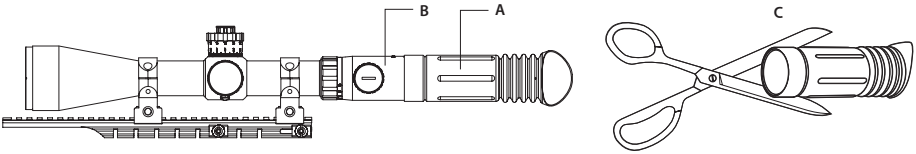

FIGURE 3-13. LIGHT SUPPRESSOR FOR A DAY SCOPE

3.1.7 FASTENING AN ADVANCED WIRELESS REMOTE CONTROL TO A WEAPON

Using the supplied Velcro tape (A, Figure 3-14), fasten the remote control (B) to your weapon in an easily accessible place (e.g., on the front of the rifle stock).

If your rifle has a Picatinny/Weaver rail on the front end, you can use the Picatinny adapter for the Advanced Wireless Remote (C). Install the adapter onto the rail (D). Insert the remote control unit into the adapter.

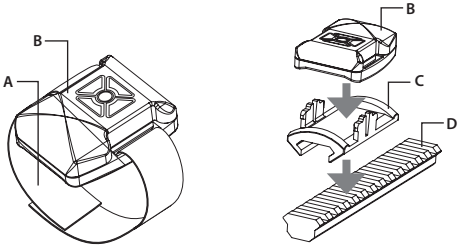

FIGURE 3-14. ADVANCED WIRELESS REMOTE CONTROL

3.1.8 INSTALLING ADDITIONAL EQUIPMENT

Use the side Picatinny/Weaver rail to install any additional equipment, such as the Armasight Digital Video Recorder, a range finder, or the Extended Battery Pack.

3.1.9 CONNECTING AN ADDITIONAL EQUIPMENT

CAUTION:

Turn off the Apollo PRO before you begin connecting/disconnecting any external equipment and before removing the batteries.

Remove the protective cap from the connector.

Connect the cable from either the Armasight Digital Video Recorder (Figure 3-15) or the Extended Battery Pack to the Apollo PRO connector.

Use plug A (Figure 3-16) of the video cable to connect an external video recorder/ monitor/ TV to the Apollo PRO. Connect plug C of the video cable to the Apollo PRO connector.

Use plug B of the video cable to connect an external power source (6VDC/ 600mA) to the Apollo PRO. Connect plug C of the video cable to the Apollo PRO connector.

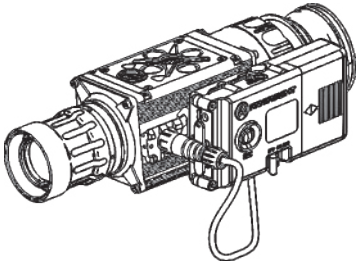

FIGURE 3-15. ARMASIGHT DIGITAL RECORDER DT INSTALLATION

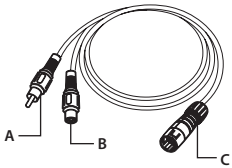

FIGURE 3-16. VIDEO CABLE

NOTE:
The external power supply must have a standard OD double-pole socket with a positive center contact.

CAUTION:
After removing the cable, replace the protective cap over the connector.

3.1.10 INSTALLING THE 3X MAGNIFIER

Figure 3-17 shows the Apollo PRO with the3x magnifier installed.

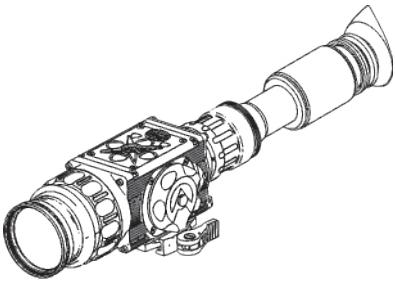

FIGURE 3-17. THE APOLLO PRO WITH A 3X MAGNIFIER

To install the 3x magnifier on the Apollo, do the following:

1. Take off the output lens cap and place it into the storage case.
2. Screw the 3x magnifier into the Apollo's output lens thread.

3.2 CONTROLS AND DISPLAY INDICATIONS

3.2.1 CONTROLS

CAUTION:
DO NOT force the equipment controls past their stopping points.

The Apollo PRO controls are shown in Figures 3-18 and 3-19 and are defined in Tables 3-1 and 3-2. The ITEM NO. columns of the tables indicate the numbers used to identify items in the figures.

NOTE:
Various display symbols indicating the current operating state of the Apollo PRO can be displayed permanently, may appear momentarily, or can be set to appear only when a certain function is activated.

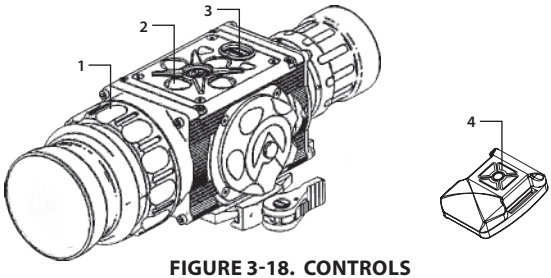

FIGURE 3-18. CONTROLS

TABLE 3-1. CONTROLS AND INDICATORS

ITEM NO.	CONTROL/INDICATOR	FUNCTION
1	Objective Focus Ring	Focuses the objective lens. Adjusts for the sharpest view of the scene. The total focus range is covered within 3/4 turns of the focus ring. Focus range is dependent on system magnification.
2	Control Panel Buttons	Configures operational settings. See Table 3-2 for button functions.
3	POWER Button	Turns the equipment ON when pushed, or turns the equipment OFF when held down for more than 3 consecutive seconds.
		When the Apollo PRO is operational, a single, quick push will take a still image.
4	Remote Control Buttons	A five-button wireless remote switch is included to operate and modify settings, in order to optimize the image without having to remove your hands from the weapon. Duplicates the functions of the control panel buttons.
—	Battery Status Indicator (a battery icon in the top right corner part of the display)	The color filled (green/ yellow/ red) bar in the battery icon indicates the current power level of the internal battery, or remaining battery life.
		A fully shaded battery icon indicates a charged battery.
		A flashing, transparent battery icon indicates low battery life and impending battery failure.

The button control panel is shown in Figures 3-19.

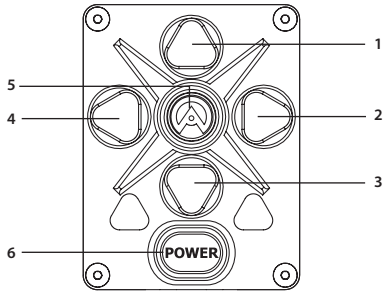

FIGURE 3-19. BUTTON CONTROL PANEL

Table 3-2 contains the button functions and their descriptions. The ITEM NO. column of the table indicates the number used to identify buttons in Figure 3-19.

> **NOTE:**
> Each button is responsible for different functions, which can be executed in one of three ways: a single push, holding the button down for 3+ seconds, or using a combination of two buttons. Pushing a button for 3+ seconds is considered holding it down.

TABLE 3-2. BUTTON CONTROLS

ITEM NO.	FUNCTION	DESCRIPTION
1, 3	DISPLAY BRIGHTNESS CONTROL	Push button (1) once to increase the screen brightness, or push button (3) once to decrease the screen brightness.
	IMAGE PALETTE CONTROL	To scroll up through the available palettes, hold down button (1) or (3) to scroll down or up respectively. There are 6 palettes available: White Hot, Black Hot, Sepia, Fusion, Rainbow, and Rain.
	USER-CONTROLLED MANUAL NON-UNIFORMITY CORRECTION/FLAT-FIELD CORRECTION (UCMNUC/ FFC)	Hold down buttons (1) and (3) simultaneously to use the User-Controlled Manual Non-Uniformity Correction/ Flat-Field Correction (UCMNUC/ FFC).
	UP, DOWN	Use the UP (1) and DOWN (3) buttons to navigate through the items in the menu.
2	DIGITAL ZOOM CONTROL	To change the zoom gradually, push button (2).
	RETICLE ON/ OFF	Hold down button (2) to turn the reticle ON or OFF.
4	RETICLE COLOR CONTROL	To change the reticle color, push button (4). There are four colors available: black, white, red, and cyan.
	RETICLE PATTERN CONTROL	To scroll through the reticle types, hold down button (4). There are five types of fixed reticles available: “Dot 4 MOA,” “Line Dot,” “Cross Center Dot,” “Cross,” and “Crosshair.”
2, 4	RETICLE POSITION ZEROING	Push down buttons (2) and (4) simultaneously to fully center the reticle.
	LEFT, RIGHT	Use the LEFT (4) and RIGHT (2) buttons to navigate through items in the menu.

TABLE 3-2. CONTINUED

ITEM NO.	FUNCTION	DESCRIPTION
5	SELECTION	Push the SELECTION button (5) to view settings available for the item selected.
	MAIN MENU	Holding down button (5) will bring up the Main Menu. The menu includes the following functions: Palette, Reticle, Boresight, Enhancement, Store Image, Settings, and Power Down.
	UCMNUC/ FFC PROCESS INTERRUPTION	Pushing button (5) when the countdown is on the screen will cancel the UCMNUC/ FFC, and the shutter will not interrupt viewing.
6	POWER ON	Push POWER to turn the equipment on.
	TAKE IMAGE	A single push of the POWER button will take a still image, once the unit is operating.
	POWER OFF	Holding down the POWER button down for 3+ seconds will turn off the equipment.

3.2.2 MAIN MENU

Most setup options can be accessed from the MAIN MENU.

To display the MAIN MENU, hold down the MENU button (5) on the control panel (Figure 3-20).

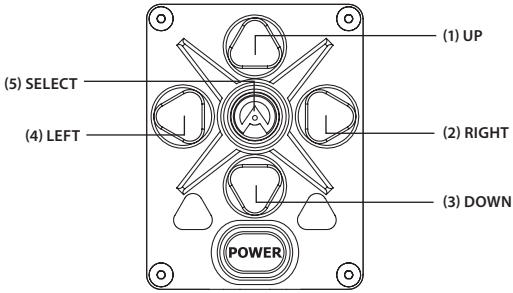

FIGURE 3-20. MAIN MENU NAVIGATION BUTTONS

Once the MAIN MENU is displayed (Figure 3-21), use the UP (1) and DOWN (2) buttons (Figure 3-11) to navigate through the items on the menu.

Push the SELECT button to view the settings available for the item selected

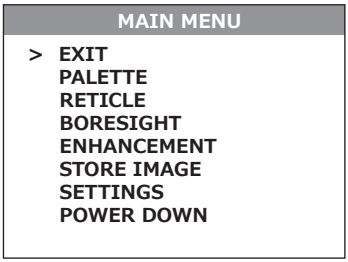

FIGURE 3-21. MAIN MENU

NOTES:

Navigate through submenu items by pushing UP (1) and DOWN (3), except where otherwise expressly indicated.

The LEFT (4) and RIGHT (2) buttons are only available when specified on the menu screen with < > symbols.

After a menu item is selected with an arrow pointer, push SELECT (5) to activate the selected function.

Select EXIT and then push SELECT (5) to return to the MAIN MENU.

Palette Menu

The PALETTE menu (Figure 3-22) allows you to select from a choice of temperature imaging modes: White Hot, Black Hot, Sepia, Fusion, Rainbow, and Rain.

The palettes act as color templates for visualization of temperature changes in the scene.

To navigate through the items on the PALETTE menu, press the UP/DOWN buttons.

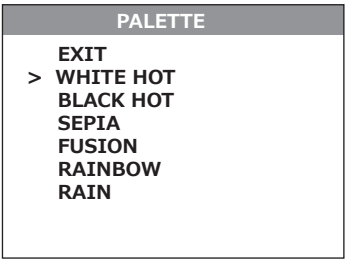

FIGURE 3-22. PALETTE MENU

NOTE:

The most popular palettes are White Hot and Black Hot, usually known as inversion. White Hot is best for spotting targets, and Black Hot is most useful for situational reading.

NOTE:

Training and experience are required to quickly and properly interpret thermal images.

Reticle Menu

The RETICLE menu (Figure 3-23) allows you to select a reticle from a variety of patterns: “Dot 4 MOA,” “Line Dot,” “Cross Center Dot,” “Cross,” “Crosshair,” or “No Reticle,” and position with no aiming mark.

To navigate through items on the RETICLE menu, hold down the LEFT/RIGHT button.

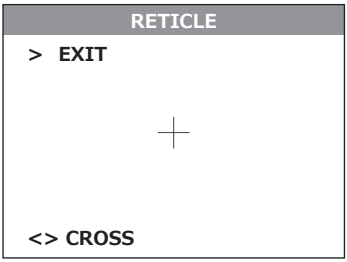

FIGURE 3-23. RETICLE MENU

Boresight Menu

The BORESIGHT function allows you to change the position of the reticle on the display. Figure 3-24 shows the boresight screen.

Push the buttons UP/DOWN and RIGHT/LEFT to shift the reticle on the display up and down, or to the right and left, respectively. Holding down the UP/DOWN and RIGHT/LEFT buttons will cause accelerated movement of the reticle in 4 pixel increments.

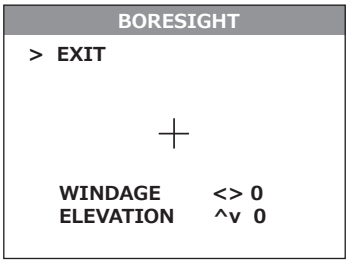

FIGURE 3-24. BORESIGHT MENU

Every time one of these buttons is pushed, the reticle shifts a single pixel increment corresponding to the minimum boresight correction value. The center of impact on the target moves based on the specified windage/elevation boresight increment in the **opposite direction** to the direction of the reticle shift.

> **NOTE:**
> Remember that the **center of impact on the target shifts in the opposite direction to the reticle shift**. To bring the center of impact to the right/left and up/down, you must shift the reticle to the left/right and down/up, respectively.

To control the shift of the reticle, look for the running coordinates of the reticle center that is printed in the lower left hand corner of the display.

> **NOTE:**
> For display coordinates, the origin is the center of the display. The running coordinate of the reticle is the number of incremental shifts of the reticle from the display center. The (-) sign appears before the displayed number when the reticle shifts left or down (and the center of impact on the target shifts right or up, respectively).

Hold down button combo (LEFT+RIGHT) to reset to zero azimuth and elevation. The reticle will shift to the center of the display.

Enhancement Menu

The ENHANCEMENT menu (Figure 3-25) settings allow the user to take advantage of advanced signal processing algorithms, and improve the quality of the image under a variety of different thermal environments.

CONTRAST – Active Contrast Enhancement (ACE) – a digital contrast correction that allows for a smart scene optimization based on dynamic adjustments, where a variety of contrast levels occur. The adjustment range is from -8 to +8 with a default value of 0. Lower values will cause hotter objects to have greater contrast, and higher values will cause colder objects to have greater contrast.

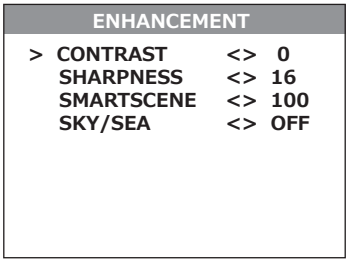

FIGURE 3-25. ENHANCEMENT MENU

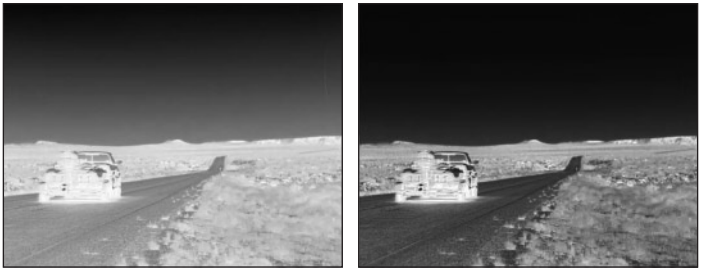

CONTRAST -8 CONTRAST +8

FIGURE 3-26. DIGITAL CONTRAST CORRECTION

SHARPNESS – Second Generation Digital Detail Enhancement (DDE) – a sharpness correction that digitally enhances the picture, significantly improving edge sharpening and further reducing image noise. The adjustment range is from -20 to +100, with a default value of 16. Lower values will create an image with softer edges. Higher values will make objects sharper, enhance details, and increase the signal-to-noise ratio.

SHARPNESS -20 SHARPNESS +100

FIGURE 3-27. SHARPNESS CORRECTION

SMART SCENE – Smart Scene Optimization (SSO) – a fine-tuning computational correction that significantly improves overall visual acuity for targets with thermal signatures similar to the surrounding background. Higher values provide a more linear automatic gain control, and objects with similar, but not identical temperatures can be differentiated with greater accuracy. The adjustment range is from 0 to 100 with a default value of 100.

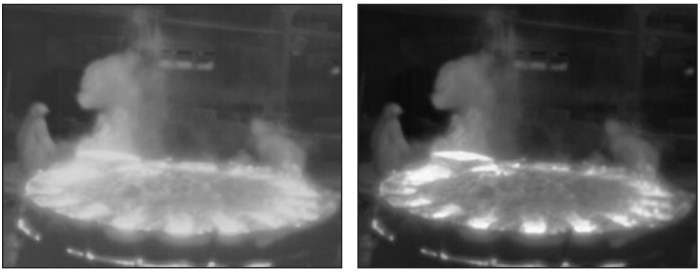

SMART SCENE 0 SMART SCENE 100

FIGURE 3-28. SMART SCENE OPTIMIZATION

SKY/SEA – Information Based Histogram Equalization (IBHEQ) – a "Sky/Sea" enhancement – information-based, environment-dependent algorithm that automatically adjusts camera gain and excludes pixels determined to not contain critical information. This is especially helpful in scenes with great expanses of visible sky or water. Turning the "Sky/Sea" enhancement ON will improve contrast, but at the possible loss of some scene content.

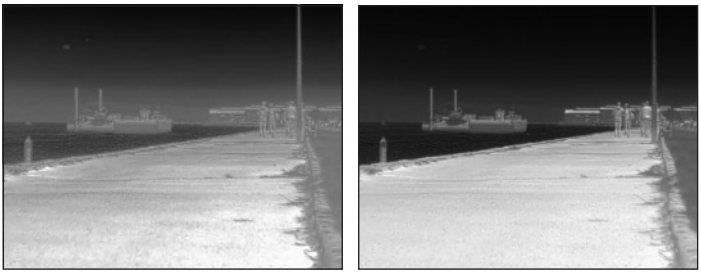

SKY/SEE OFF - PLANE AND BANNER ARE MORE EVIDENT SKY/SEE ON – MORE CONTRAST DEVOTED TO PEOPLE AND THE BOAT

FIGURE 3-29. "SKY/SEA" ENHANCEMENT

Store Image Menu

The STORE IMAGE menu (Figure 3-30) allows the operator to take, review, and delete all images in the camera. When previewing images, the image counter will show the current number of still images versus the total number of images in the camera.

```
STORE IMAGE
> EXIT

  SAVE IMAGE
  VIEW IMAGE   <> 1/1
  DELETE ALL
```

FIGURE 3-30. STORE IMAGE MENU

Settings Menu

The SETTINGS menu (Figure 3-31) allows you to change the contrast, brightness, video standard, compass calibration, and temperature scale settings (in certain models), as well as to restore the settings to their factory defaults. The Firmware (FW) revision number is listed at the bottom of the menu display.

```
SETTINGS
> RIFLE PROFILE    <>  1
  STANDARD         NTSC
  CAL. COMPASS
  LEFT MARGIN      <>  85
  TOP MARGIN       <>  0
  LEARN REMOTE
  FACTORY RESET
  FW: XXXXXXXXXX
```

FIGURE 3-31. SETTINGS MENU

RIFLE PROFILE

Supports 3 individual rifle profiles with individual boresight, reticle, and palette settings.

STANDARD

Changes the video output standard between NTSC and PAL.

CALIBRATE COMPASS

Select to calibrate the compass. When selected, rotate the camera in all directions for best calibration results.

LEFT MARGIN

Shifts the screen left to right.

TOP MARGIN

Shifts the screen up and down.

LEARN REMOTE

Learns the remote channel and encryption. Select this to pair a new remote with the camera. When pushed, the phrase PUSH ANY REMOTE KEY will appear. Push any button on the remote. When calibration is successful, the phrase LEARN SUCCESSFUL will appear.

FACTORY RESET

Resets the camera to factory defaults.

SOFTWARE VERSION

Software release versions are shown in alphanumeric format. To view, push SELECT.

Power Down Menu

The POWER DOWN menu (Figure 3-32) allows the user to turn the camera off or to set it in standby mode so it can be activated from the wireless remote.

```
POWER DOWN
> TURN OFF
  STANDBY 5 MIN
  STANDBY 30 MIN
  STANDBY 60 MIN
  STANDBY 8 HOURS
```

FIGURE 3-32. POWER DOWN MENU

NOTE:

To exit after completing the configuration, highlight EXIT on the MAIN MENU and push SELECT. All settings will be saved.

3.2.3 DISPLAY INDICATIONS

The screen status view (Figure 3-33) shows the status messages on the screen.

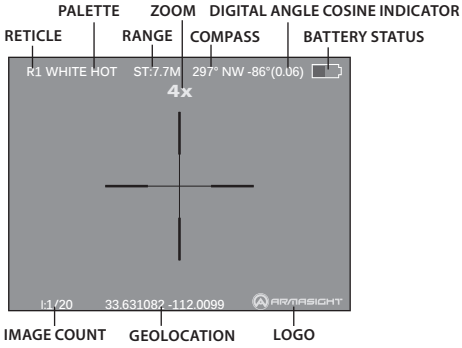

FIGURE 3-33. STATUS VIEW

3.3 OPERATING PROCEDURES

3.3.1 OPERATING

WARNING:

Always make sure your firearm is unloaded before you place the scope on the firearm. If installation is interrupted, verify that the chamber is empty before resuming. Safe handling rules should be followed at all times.

CAUTION:

DO NOT force the equipment controls past their stopping points.

CAUTION:

To prevent thermal damage to the equipment, never point it, either powered or not, directly at the sun or any other source of high intensity light that the unprotected human eye cannot tolerate (such as a welding arc). To prevent inadvertent exposure to these sources, never leave the equipment without the objective lens cap secured.

Operating procedures are as follows:

1. Remove the Apollo PRO from the carrying case.
2. Install the Apollo PRO on the weapon with a day scope. Refer to Parts 3.1.2-3.1.5 for installation procedures.
3. Verify that the Apollo PRO is securely mounted to the weapon or scope.
4. Remove the objective lens cap.
5. Activate the Apollo PRO by turning the turn-pull switch ON. After approximately 3 sec, video of the thermal scene should appear.
6. Point the equipment at an object.
7. If the day scope includes a focusing ring (i.e., parallax adjustment knob), adjust the focus for a parallax-free image.

8. Turn on the day scope's reticle illumination and adjust the reticle brightness.
9. Adjust the focus of Apollo PRO by turning the focus ring (CW for far focus, CCW for near focus).
10. Using the buttons on the control panel (Figure 3-34), configure the Apollo PRO to adapt it to your situation.

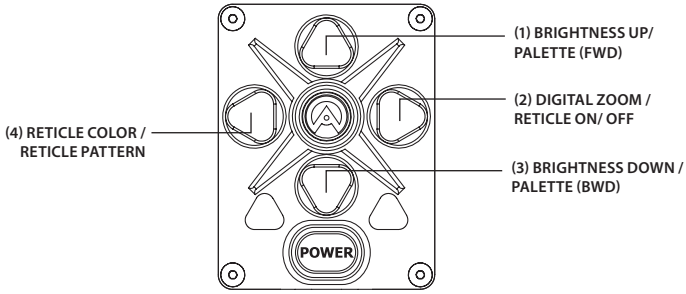

FIGURE 3-34. SETTING BUTTONS

For more information on operational setting procedures, see Part 3.2 (Controls and Display Indications).

A. Adjust the brightness of the display for your comfort.

Push the brightness adjustment buttons to increase (1)/ decrease (3) the display brightness by one level at a time until you reach your desired brightness level.

B. Use the UCMNUC/FFC (User-Controlled Manual Non-Uniformity Correction/Flat-Field Correction) function to improve image quality. As the camera heats up during use, the detector pixels will drift. The pixels do not drift uniformly. The camera software compensates for the drift up to an accurate position point, but when the limit is reached the UCMNUC/FFC function is triggered. A uniform mechanical shutter is briefly placed between the lens and the detector and the signal is processed.

Hold down the two brightness control buttons (1 and 3) simultaneously to manually trigger a User-Controlled Manual Non-Uniformity Correction/ Flat-Field Correction.

If necessary, interrupt the automatic UCMNUC/FFC process by pushing the central button (5) on the control panel during the 5-second countdown, which appears at the bottom of the display.

C. Adjust the necessary adjustment using the MAIN MENU. See Part 3.2.2 (Using the MAIN MENU).

NOTE:
To exit after completing the configuration, highlight EXIT on the MAIN MENU and push SELECT. All settings will be saved.

11. To align the barrel of the weapon, place the reticle on the desired target. To allow for the bullet's travel (i.e. bullet drop, windage, and the target mobility), adjust the boresight of the day scope.

Collateral applications include: functionality as a unity magnification (1x) standalone weapon sight; or, a 3x weapon sight in conjunction with a 3x Magnifier.

Using the buttons on the control panel, configure the Apollo PRO for use as weapon sight:

1. Turn the reticle ON/ OFF.

   Hold down button (2) to turn the reticule ON or OFF.
2. Select the color of the reticle.

   Push the reticle color control button (4) to select black, white, red, or cyan.
3. Select a reticle pattern.

   Hold down button (4) to select from a choice of reticle patterns: "Dot 4 MOA," "Line Dot," "Cross Center Dot," "Cross," or "Crosshair" (Figure 3-35).

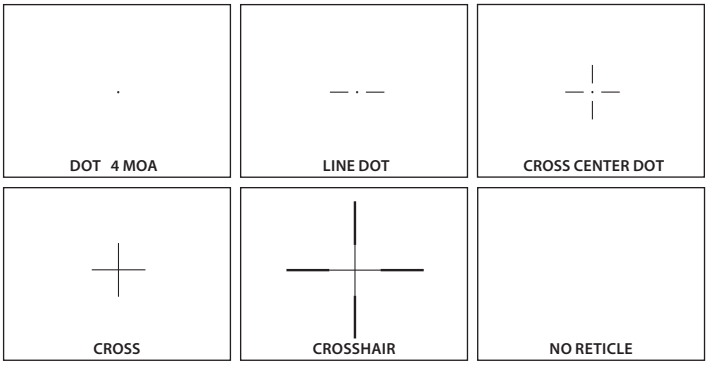

FIGURE 3-35. RETICLE PATTERNS

NOTE:
Reticles will appear in the most recently saved position.

4. Use digital zoom to magnify the central area of the displayed scene.
   Push the zoom control button (2) to slowly magnify the displayed scene. The X1, X2, X4, X8 symbols will appear in the lower part of the display. Maximum zoom factor is dependent on the equipment model.

NOTE:
Digital zoom allows distant objects to appear larger; however, the resolution will be compromised.

NOTE:
Zooming does not affect the boresight.

NOTE:
Digital zoom and reticle color control help target detection and discrimination.

5. To align the barrel of the weapon, place the reticle on the desired target. To allow for the bullet's travel (i.e. bullet drop, windage, and the target mobility), use the boresight adjustment buttons.

NOTE:
The Apollo PRO has a built-in GPS receiver and Bluetooth© wireless capability, and can directly interface with most Smartphones. GPS and Bluetooth© are activated automatically when the device is turned on.

CAUTION:
DO NOT leave the equipment activated when not in use.

3.3.2 BORE SIGHTING THE APOLLO PRO

WARNING:
Always make sure your firearm is unloaded before you place the scope on the firearm. If installation is interrupted, verify that the chamber is empty before resuming. Safe handling rules should be followed at all times.

NOTE:
The Apollo PRO must be zeroed each time it is mounted to a **new** weapon.

Boresight the Apollo PRO as follows:

1. Locate a target at the fire adjustment range (100yd or 100m for example).
2. Turn on the Apollo PRO.
3. Adjust the eyepiece of the 3x Magnifier and focus the objective lens to sharpen the image of the target.
4. Adjust the brightness of the display.
5. Select a reticle pattern.
6. Take aim by centering the reticle on the target and fire a series of shots (3-4).
7. Find the point of impact and measure its vertical and horizontal deviations from the center of the target.
8. Work out the values of boresight correction required to compensate for the measured deviation of the point of impact from the center of the target. Table 3-3 contains examples of calculating boresight correction values.

TABLE 3-3. EXAMPLE OF CALCULATING BORESIGHT CORRECTIONS (100YD AND 100M FIRE RANGES)

MODEL		APOLLO PRO SR 336	APOLLO PRO MR 336 / APOLLO PRO LR 640	APOLLO PRO MR 640
Boresight Increment *		1 in/ 100 yd 3cm/ 100m	0.6 in/ 100 yd 1.7cm/ 100m	1.2 in/ 100 yd 3.4cm/ 100m
Measured Windage/Elevation Deflection of the POI from the Target Center (for example)		5in / 2in (13cm / 5cm)	7in / 3in (18cm / 8cm)	4in / 2in (10cm / 5cm)
Correction Value	Windage	5/1=5 shifts (13/3≈4 shifts)	7/0.6≈11 shifts (18/1.7≈11 shifts)	4/1.2≈3 shifts (10/3.4≈3 shifts)
	Elevation	2/1=2 shifts (5/3≈2 shifts)	3/0.6=5 shifts (8/1.7≈5 shifts)	2/1.2≈1 shifts (5/3.4≈1 shifts)

** 1) For NTSC resolution (640x480)*

2) To calculate boresight increment value for a fire range R different from 100 yards, use the coefficient R/100. So at a range R (in yards) the boresight increment is:

R/100, in — for Apollo PRO SR 336;
0.6×R/100, in — for Apollo PRO MR 336 and Apollo PRO LR 640;
0.6×R/100, in — for Apollo PRO MR 640.

3) To calculate boresight increment value in metric units for a fire range R different from 100m, use the coefficient R/100. So at a range R (in meters) the boresight increment is:

3×R/100, cm — for Apollo PRO SR 336;
1.7×R/100, cm — for Apollo PRO MR 336 and Apollo PRO LR 640;
1.7×R/100, cm — for Apollo PRO MR 640.

9. Use the BORESIGHT MENU to apply corrections required to bring the point of impact as close as pos-

sible to the center of the target. See Part 3.2.2 (Using the MAIN MENU).

A. Use the LEFT and RIGHT buttons to adjust for windage. Moving the reticle in the positive direction (to the right) will move the point of impact to the left. Moving the reticle in the negative direction (to the left) will move the point of impact to the right.
B. Use the UP and DOWN buttons to adjust for elevation. Moving the reticle in the positive directly (up) will move the point of impact down. Moving the reticle in the negative direction (down) will move the point of impact up.

10. Fire a series of shots to check the boresight.

11. After completing the boresight adjustment procedure you can use RIFLE PROFILE function of Setting menu to save the boresighted reticle position map in the "Rifle Profile" tab. This can be done for the same Clip-On equipped to up to 3 different rifles (Profile 1, Profile 2, and Profile 3).

12. Turn off the Apollo PRO and place the cap over the objective lens.

3.3.3 APOLLO PRO SHUT-DOWN

NOTE:
Shut down the Apollo PRO properly to avoid losing unsaved settings and data.

Shut-down the Apollo PRO as follows:

1. Be sure to save your settings and data.
2. Turn off the Apollo PRO.
3. Replace the cap on the objective lens.
4. Disconnect the cable (if applicable).
5. Place the cap on the connector.
6. Dismount the Apollo PRO from the weapon.
7. Remove the batteries.

CAUTION:
Do not store the Apollo PRO with the batteries installed.

8. Store the Apollo PRO and all accessories in the carrying case.

4

PREVENTIVE MAINTENANCE AND TROUBLESHOOTING

4.1 PREVENTIVE MAINTENANCE CHECKS AND SERVICES

4.1.1 PREVENTIVE MAINTENANCE CHECKS AND SERVICES (PMCS)

Table 4-1 Preventive Maintenance Checks and Services (PMCS), has been provided so that you can keep your equipment in good operating condition.

Perform functional tests in the order listed in Table 4-1.

Operating procedures are detailed in Chapter 3.

Explanation of Table Entries:

SEQ NO. column. Sequence numbers are for reference and appear in the order required to perform checks and services.

LOCATION OF ITEM TO CHECK/ SERVICE column. Indicates the location and the item to be checked or serviced.

PROCEDURE column. Details the check/ service procedure.

NOT FULLY MISSION CAPABLE IF... column. Indicates what faults will prevent your equipment from operating successfully.

TABLE 4-1. PREVENTIVE MAINTENANCE CHECKS AND SERVICES

SEQ NO.	LOCATION OF ITEM TO CHECK/ SERVICE	PROCEDURE	NOT FULLY MISSION CAPABLE IF...
		PRE-OPERATIONAL CHECKS	
1	Completeness	Open storage/carrying case and inventory items by comparing with the data specified in this manual.	Missing items.
2	Soft Carrying Case	Shake out loose dirt or foreign material. Inspect for tears, cuts, excess wear or damage.	
3	Body	Inspect for cracks or damage. Scratches and gouges are OK if operation is not affected. Inspect for missing parts. Clean as required.	Cracked or damaged. Missing parts.
4	Objective Lens Cap	Inspect for cuts, tears and dirt. Clean as required.	Cap is torn or cut. Cap is not secured to the housing of the lens.
5	Output Lens Cap	Inspect for damage and dirt. Clean as required.	Cap is damaged.

TABLE 4-1. CONTINUED

SEQ NO.	LOCATION OF ITEM TO CHECK/ SERVICE	PROCEDURE	NOT FULLY MISSION CAPABLE IF...
6	Battery Compartment and Cap, Battery Cartridge	Inspect for corrosion, moisture, and corroded or defective contacts. Inspect for cap damage or retainer breaks. Inspect rubber gasket for damage.	Contacts are damaged or corroded. Retainer is broken. Cap or rubber gasket is damaged.
7	Lenses	Inspect for cleanliness, scratches, chips or cracks. Clean as required.	Chipped or cracked. Scratches hinder vision through the equipment.
8	Objective Focus Ring	Rotate objective focus ring to ensure it is not too tight or too loose. Range is approximately 3/4 turns.	Ring gets stuck, is too loose, or adversely affects the user's ability to properly focus the objective lens.
9	Connector	Inspect for corrosion, moisture, and corroded or defective contacts. Inspect for cap damaged or retainer breaks.	Contacts are damaged or corroded. Cap is damaged. Retainer is broken.
10	Mount	Inspect for damage or corrosion, for missing parts. Check for proper operation and attachment security.	Damaged. Missing parts. Clamping device is inoperative.
11	Remote Control Unit	Check for damage and missing parts. Check Velcro tape for wear.	Damaged. Missing parts.
12	Video Cable	Inspect for damage. Inspect the cable connector for corrosion, moisture, and corroded or defective contacts. Clean as required.	Damaged.
		OPERATIONAL CHECKS	
NOTE: For a complete operational check, it is necessary to connect a video monitor to the Apollo PRO.			
13	Power Button	Install the batteries. Remove the objective lens cap. Point the equipment at an object. Turn the equipment on. Look for a thermal image on the display. Look for a flashing battery icon in the eyepiece viewing area.	No thermal image. Battery icon is flashing (indicates a low battery).
14	Control Board	Ensure the Clip-on is responsive to control buttons.	Unresponsive buttons.
15	Remote Control	Ensure the Clip-on is responsive to remote control buttons.	Unresponsive buttons.
16	Video Cable	Connect an external monitor to the Clip-on. Point the equipment on an object. Turn the equipment on. Look for an image on the monitor. Turn off the Clip-on. Disconnect the monitor.	No image.
		POST-CHECK PROCEDURES	
		Turn off the equipment.	
		Replace the objective lens cap.	
		Remove the batteries.	
		Return the equipment and all accessories to the carrying case.	

4.2 OPERATOR TROUBLESHOOTING

The purpose of troubleshooting is to identify the most frequent equipment malfunctions, probable causes, and corrective actions required.

Table 4-2 lists the common malfunctions that may be found during the operation or maintenance of the Apollo PRO. Perform the tests/ inspections and corrective actions in the order listed.

This table does not list all of the malfunctions that may occur with your device, or all of the tests and corrective actions that may be necessary. If you experience an equipment malfunction that is not listed, or is not fixed by the corrective actions listed in the table, please contact Armasight's Customer Service center.

TABLE 4-2. OPERATOR TROUBLESHOOTING

MALFUNCTION	PROBABLE CAUSE/ TEST/INSPECTION	CORRECTIVE ACTION
The Clip-on fails to activate.	Batteries are missing or improperly installed.	Insert batteries or install correctly.
	Batteries are dead.	Replace the batteries.
	Batteries, surfaces or contacts are dirty or corroded.	Clean the contact surfaces with a pencil eraser and/or alcohol and cotton swabs.
	Remote control unit is damaged.	Please contact Customer Support.
	Remote control battery is dead.	Replace the battery as per Part 4.3.4.
	The equipment is damaged.	Please contact Customer Support.
The Clip-on is not responsive to control buttons.	The equipment is damaged.	Please contact Customer Support.
Remote control does not work.	Battery is missing or improperly installed.	Insert battery or install correctly.
	Battery is dead.	Replace the battery.
	Battery surfaces or contacts are dirty or corroded.	Clean the contact surfaces with a pencil eraser and/or alcohol and cotton swabs.
	Remote control unit is damaged.	Please contact Customer Support.
Poor image quality.	Check objective lens and eyepiece focus.	Refocus.
	Check for fogging or dirt on objective lens and eyepiece.	Clean the lenses as detailed in Part 4.3.2.
	The equipment is damaged.	Please contact Customer Support.
No image on an external monitor.	Video cable is damaged.	Replace the video cable with a new one. Please contact Customer Support.
	The equipment is damaged.	Please contact Customer Support.
Hindered rotation of the battery cap.	Dirty cap thread.	Clean the thread.
	Damaged cap thread.	Replace the cap with a new one. Please contact Customer Support.
Light is visible around suppressor.	Check suppressor resilience.	If the suppressor is defective, please contact Customer Support.

4.3 MAINTENANCE

4.3.1 GENERAL

The Apollo PRO operator maintenance consists of operational tests, inspections for unit serviceability, cleaning and mounting procedures, corrective actions (troubleshooting and replacement of a limited number of parts). Maintenance instructions covered elsewhere in this manual (PMCS, troubleshooting, etc.) are not repeated in this section.

CAUTION:
The Apollo PRO is a precision electro-optical instrument and must be handled carefully at all times to prevent damage.

CAUTION:
DO NOT dismantle the equipment.

4.3.2 CLEANING PROCEDURES

Clean the Apollo PRO and optional items as follows:

1. Gently brush off any dirt from the equipment using only a clean, soft cloth.
2. Moisten the cloth with fresh water and gently wipe the external surfaces (except for optical surfaces).
3. Dry any wet surfaces (except for optical surfaces) with another clean, dry soft cloth.
4. Using a lens brush, carefully remove all loose dirt from optical surfaces (objective lens and eyepiece).
5. Dampen a cotton swab with ethanol. Gently and slowly wipe the optical surface. Clean the optical surface using circular movements from the center to the edge, not touching the lens holder and changing the cotton swab after each circular stroke. Repeat until the optical surface is clean.
6. Clean the battery contact surfaces and contact springs with a pencil eraser and/or alcohol and cotton swabs.

CAUTION:
Thoroughly dry each item before replacing into the storage/carrying case.

4.3.3 BORE SIGHTING

Perform the Apollo PRO boresighting when using the device as a weapon sight:

— When the Apollo PRO is mounted to a new weapon for the first time;

— After repair of the Apollo PRO/ weapon;

— As the need arises (in case of systematic inaccuracy and missing the target).

Refer to Part 3.3.2 for boresight procedures.

4.3.4 BATTERY REMOVAL AND REPLACEMENT

Refer to Part 3.1.1 for battery installation procedures.

Replace the remote control battery as follows:

1. Using a screwdriver, unscrew the four screws (A, Figure 4-1) that secure the cover to the bottom of the unit. Remove the cover.

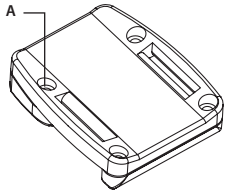

FIGURE 4-1. ADVANCED WIRELESS REMOTE CONTROL BATTERY INSTALLATION

2. Replace the battery with new one (CR2032, 3V). Install the battery, aligning their polarity markings (+/-) with those embossed on the compartment.
3. Replace the cover and tighten the screws (A).

4.4 RETURN INSTRUCTIONS

For service, repair or replacement, please email ***service@armasight.com***.

To assist the Service Representative (SR) with determining if the item is repairable, please provide the following information:

1. Serial Number of the defective item (engraved on bottom of the equipment).
2. Thorough description of the malfunction, defect or damage.
3. An explanation of how the malfunction, defect or damage occurred, if known.

If the SR determines that the item is under warranty or should be returned for repair, a Return Material Authorization number (RMA#) will be provided.

When returning the Apollo PRO for service or repair, the following procedures should be followed to prevent any additional damage:

1. Make sure the Clip-on is free of all contaminants such as dirt or any other foreign material.
2. Remove the batteries.
3. Place the cap over the objective lens.
4. Place the Clip-on and accessories in the carrying case.

Place the Clip-on and a copy of the test report or detailed description of the failure in a suitable packing/shipping container. Mark the package with the RMA#. Ship the fastest, traceable, prepaid means to:

Armasight Inc.
815 Dubuque Avenue
South San Francisco
CA 94080
USA

A. PRODUCT WARRANTY REGISTRATION CARD

In order to validate the warranty on your product, Armasight must receive a completed Product Warranty Registration Card for each unit, or the user must complete warranty registration on our website (www.armasight.com). Please complete the included form and immediately mail it to our Service Center:

Armasight Inc.
815 Dubuque Avenue
South San Francisco
CA 94080
USA

ARMASIGHT PRODUCT WARRANTY REGISTRATION CARD

PRODUCT INFORMATION

Product Name _____ Purchased From _____

Purchase Date _____ Product Serial # _____

CUSTOMER INFORMATION

Name _____

Address _____

City _____ Country _____ Zip _____

Day Phone # _____ Home Phone # _____

E-mail address _____

Customer Signature Required

B. LIST OF SPARE PARTS

The parts authorized by this list of spare parts are required for operator maintenance. The list includes parts that must be removed before replacing authorized parts.

The PART NO. column indicates the primary number used by the manufacturer, which controls the design and characteristics of the item in terms of its engineering drawings, specifications, standards, and inspection requirement, to identify an item.

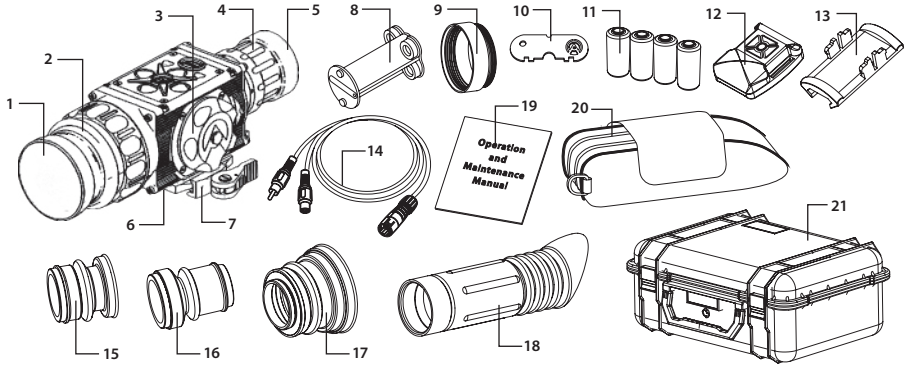

FIGURE B-1. APOLLO PRO SPARE PARTS LIST

TABLE B-1. APOLLO PRO SPARE PARTS LIST

ITEM NO.	DESCRIPTION	PART NO.
1	30mm Objective Lens Cap	AAPPROLC30
-	50mm Objective Lens Cap	AAPPROLC50
-	100mm Objective Lens Cap	AAPPROLC100
2	30mm Objective Lens Assembly	AAPPROLA30
-	50mm Objective Lens Assembly	AAPPROLA50
-	100mm Objective Lens Assembly	AAPPROLA100
3	Battery Cap	AAPPRBC
4	Output Lens Assembly	AAPPRALA
5	Output Lens Cap	AAPPROLC
6	Seating Rail	AAPPRSR
7	Mount	AAPPRQRM
8	Battery Cartridge	AAPPRBTCTR
9	Battery Box Extender Ring	AAPPRBBER
10	Armasight Key	AAPPRASK
11	CR123A Lithium Battery	ALT
12	Advanced Wireless Remote Control	ANVR000001
13	Picatinny Adapter for Advanced Wireless Remote Control	ANRA000002
14	Video Cable	AAPPRVCB
15	Light Suppressor 1	AAPPRLS1
16	Light Suppressor 2	AAPPRLS2
17	Light Suppressor 3	AAPPRLS3
18	Light Suppressor for Day Scope	AAPPRLSDS
19	Operation and Maintenance Manual	AAPPROMM
20	Carrying Case	AGSC000009
21	Hard Shipping/Storage Case	ANHC000004
22	Side Picatinny/Weaver Rail (not shown)	AAPPRRRL
23	Connector Cap (not shown)	AAPPRCNCP

Armasight Inc.

815 Dubuque Avenue
South San Francisco
CA 94080
USA

Phone: (888)959-2259
Fax: (888)959-2260
Intl Phone/Fax: (650)492-7755

info@armasight.com

WARNING!

This product contains natural rubber latex which may cause allergic reactions! The FDA has reported an increase in the number of deaths that are associated with an apparent sensitivity to natural latex proteins. If you are allergic to latex, it is a good idea to learn which products contain it and strictly avoid exposure to those products.

www.armasight.com